Influence of embedded steel mesh inserts on post-breakage capacity of laminated glass

Marcin Kozłowski[1*] and *Dominik* Wasik[1]

[1]Department of Structural Engineering, Silesian University of Technology, Akademicka 5, 44-100 Gliwice, Poland

Abstract. Glass, as a building material, has been known for a long time. The first glass uses were limited to filling window frames. However, in recent years, the popularity of glass in construction has increased significantly. All this is due to the growing trend to bring as much natural sunlight into the buildings as possible. The increasingly popular treatment of glass as a construction material requires using laminated glass, in which a film permanently joins together two or more glass panes. This unique behaviour is because the film between the glass sheets holds the glass fragments in place when they are fractured. In this way, avoiding the risk of injury to people in the vicinity is possible. As part of the ongoing project, "Innovative solution for point-fixed laminated glass with improved capacity after glass fracture" financed by the National Center for Research and Development (NCBR) within the LIDER XI Program, an idea of laminating a steel woven mesh to glass laminates is being investigated. The steel mesh insert is designed to increase the load-bearing capacity of the sample in the post-breakage phase, thus increasing the safety of building occupants. The article deals with the post-breakage capacity of laminated glass elements subjected to three types of loading: in-plane, out-of-plane and combined actions.

1 Introduction and motivation

Glass has been widely used in buildings. For many years, its transparency was the main attribute that inspired designers to look for new uses for this material in architecture. Currently, glass is increasingly gaining new applications in construction, creating load-bearing elements such as glass roofs, facades, glass beams, stairs and balustrades [1, 2].

Glass is a brittle material; it suddenly fractures when the material reaches its strength. It does not warn about the upcoming loss of bearing capacity; such as wood or reinforced concrete (in the form of excessive deflection or cracking). For this reason, monolithic glass is unsuitable for load-bearing applications [3]. For structural elements, it is common to use laminated glass. It is a durable combination of at least two glass panes and a special laminating film (interlayer) [4]. After glass failure, the laminating film holds the glass pieces together [5]. As a result, a damaged element can maintain sufficient load-bearing capacity and structural integrity to allow people to be evacuated and avoid injury [6].

* Corresponding author: marcin.kozlowski@polsl.pl

The subject of post-breakage capacity has been investigated in several publications. In the study [7], solid-body impact tests were carried out on point-fixed laminated glass. When the glass was fractured, the samples were subjected to fatigue tests under constant load at different temperatures. The differences under such a load were also compared for an interlayer made of a standard PVB foil and an interlayer made of SG. The cracked glass laminates carried the load for various periods. This time would theoretically be enough to evacuate people in the area.

Studies reported in [8] found that the load-bearing capacity of samples in the post-breakage phase depends on the size of the broken glass fragments. In the publication [9], glass laminates with different damage levels, interlayers and glass types were tested. Quasi-static loads were carried out on simply-supported slabs, loaded in the middle of the span. After the failure of the samples, it was found that the load capacity in the post-breakage phase is influenced by the dimensions of the broken glass fragments and the stiffness of the interlayer.

Reinforcing glass laminates is a way to increase their load capacity in the post-breakage phase. The studies [10, 11] investigated the possibility of laminating rods made of different materials into beams made of laminated glass. After the appearance of the first cracks, a ductile reaction after cracking similar to a reinforced concrete beam could be observed. The reinforcement also contributed to an increase in load capacity in the post-breakage phase. Examples of reinforcement by laminating additional material into the interlayer are also published in [12, 13]. The samples were reinforced with GFRP around the holes and subjected to in-plane loading. The inserts contributed to the strengthening of the sample in the post-breakage phase, achieving more than two times increase in the ultimate load. The last example is the study [14] in which laminated glass beams were reinforced with pre-stressed GFRP strips. The samples were subjected to four-point bending tests. The elements showed plastic behaviour after the first cracks on the surface appeared.

The article deals with the post-breakage capacity of point-fixed laminated glass and reports the results of tests on elements subjected to three types of loading: in-plane, out-of-plane and combined actions. The study was conducted within an ongoing project, "Innovative solution for point-fixed laminated glass with improved capacity after glass fracture", financed by the National Centre for Research and Development (NCBR, LIDER XI Program).

2 Idea of reinforcing laminated glass

As part of the ongoing project aimed at developing innovative solutions for point-fixed laminated glass with improved capacity after glass fracture, authors are investigating the idea of laminating a steel woven mesh to glass laminates [15-17]. The concept is illustrated in Fig. 1, where a steel, woven mesh insert is placed between the interlayers before the lamination process in an autoclave. This approach allows the mesh to blend into the interlayer and become an integral composite part. The purpose of this solution is to increase the load-bearing capacity of the sample in the post-breakage phase. The primary objective is to reinforce the interlayer locally near the hole for the fastener, where the highest stress levels occur, and the interlayer tends to fail consistently.

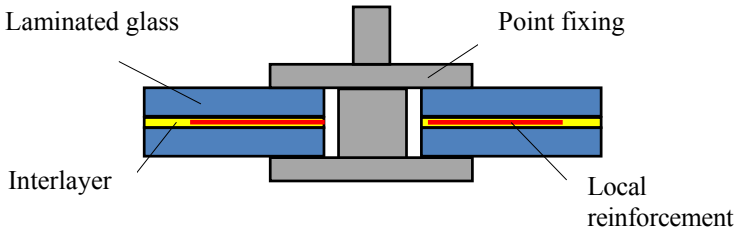

Fig. 1. Local reinforcement in point-fixed laminated glass.

3 Summary of experimental results

The section summarises the results of experiments designed to verify the effectiveness of local reinforcement of laminated glass with a woven steel mesh laminated into the interlayer. The studies were conducted in different loading configurations simulating typical loads for point-supported glass elements, such as a glass canopy.

In the studies, the same components of samples were used. Laminated glass comprised two soda–lime–silicate float glass panes. Since architectural elements made of glass mounted with point fixings usually require the application of heat-treated glass due to the high-stress concentrations around holes, fully tempered glass was utilized. Ethylene-vinyl acetate (EVA) interlayer was used in the lamination process of the glass panels. A woven steel mesh consisting of wires (0.35 mm in diameter) at a spacing of 1×1 mm^2 was used for reinforcement. All tests were performed at a relative humidity of 50% and room temperature.

3.1 In-plane loading

The dimensions of the samples were 190 × 300 mm^2, and they were composed of two toughened glass panes and two layers of 1.52 mm thick EVA Clear film. A waterjet technique created three 26 mm diameter holes in each pane.

The two were located at the bottom of the samples, while the third hole was intentionally placed at the top to induce failure in the upper fastening, see Fig. 2a. During the experiments, both reference and reinforced samples were tested. The reference samples only contained glass panes and an interlayer, while the reinforced samples had steel woven mesh placed between two interlayers (over the entire area) before going through the lamination process. The glass panes' thickness was also considered, with three options (8 mm, 10 mm and 12 mm) divided into two subtypes, reference and reinforced samples. This resulted in a total of 36 samples across 6 test series.

Fig. 2b displays the test set-up for the tensile strength experiment. It included two handles and four mounting plates. The handles were constructed from two 60 × 140 mm^2 sheets featuring a 24 mm diameter hole. The handle's lower part had a pin for attachment to the testing machine. The sample's lower part was secured to the holders using two 130 × 150 mm^2 fixing plates, while the upper fixing plates measured 60 × 150 mm^2. The lower and upper mounting plates had enough holes to mount the test sample. Five screws with a 20 mm diameter were employed to assemble the sample. The upper handle and plates were utilized to introduce displacement to the sample. The tensile strength test for laminated glass was completed in a displacement-controlled testing machine with a rate of 10 mm/min.

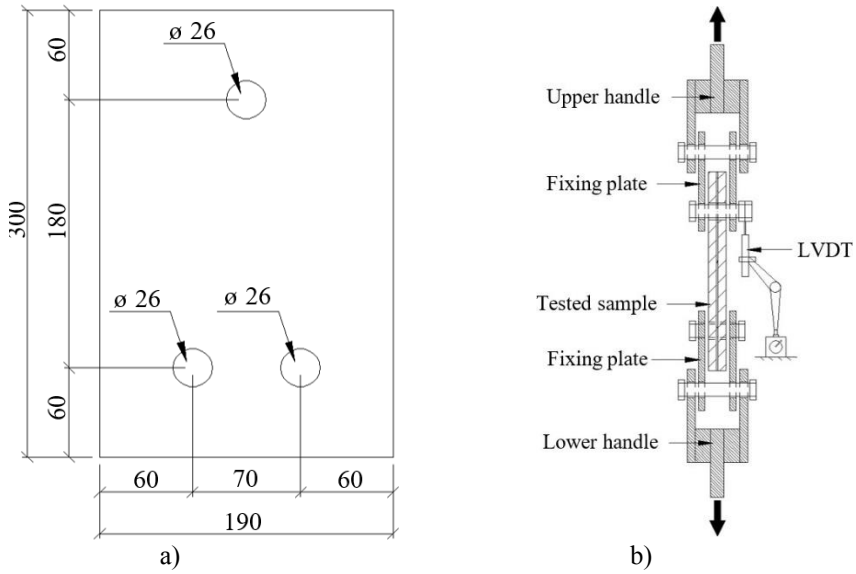

Fig. 2. In-plane loading: tested sample (a) and test set-up (b).

Fig. 3a shows a fractured sample in the test set-up. During testing, all of the samples exhibited similar behaviour. In the initial phase, the relationship between the load and the displacement indicated the sample's elastic response to the load. Following the failure of the glass, there was a sudden decrease in force due to the loss of tensile stiffness caused its fracture. Subsequently, the samples underwent progressive degradation due to further loading. During this phase, the force initially increased and then decreased until ultimate failure. The maximum value of the load in the post-breakage state ($P_{cr,max}$) is considered as ultimate. Fig. 3b compares the mean values of the ultimate load for the reference (REF) and reinforced (REI) samples. As the study shows, the reinforcement increases the post-breakage capacity by almost 300% for all test series.

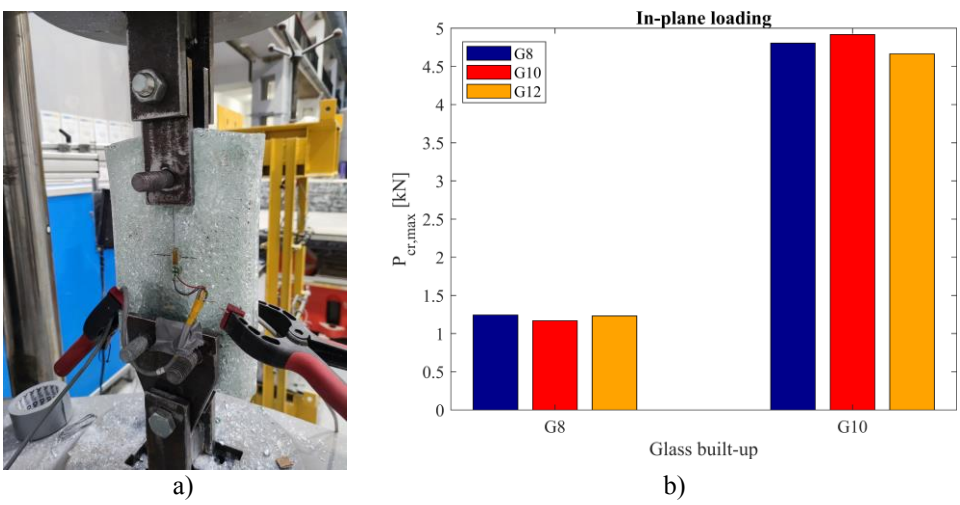

Fig. 3. In-plane loading: sample in the test set-up (a) and mean values of ultimate load (b).

3.2 Out-of-plane loading

Laminated glass components shown in Fig. 4a were utilized as part of the testing procedure. The samples measured 300 × 300 mm^2 and comprised two tempered glass panes with varying thicknesses (8, 10, and 12 mm) and a 3.04 mm EVA interlayer. Using waterjet techniques, a 20 mm diameter through-hole in the center of each component was made. Three different pane thicknesses and diameters for reinforcement (75, 110 and 150 mm) across 12 test series and 48 samples were produced.

The experimental set-up consisted of the pulling head and the fixed base, constructed from high-quality steel (see Fig. 4b). The fixed base was vertically restrained and comprised of two steel plates measuring 510 × 510 mm^2 and 20 mm thick. These plates were connected by four 12 mm diameter bolts at the corners. The bottom plate had a central 20 mm diameter hole to mount an eye-bolt to the lower grip fixture of the testing machine. The upper plate of the fixed base had a centrally located hole of 150 mm diameter for the puling head to go through with sufficient clearance. The diameter of this hole was determined based on a preliminary numerical study and literature review. The pulling head was made up of a 12 mm diameter threaded rod, an eye bolt to connect to the cross-head of the machine, and a steel disk plate (10 mm thick and 50 mm in diameter) to introduce lateral loading to the specimen. The pulling head was used to apply displacement during the experiments. Before testing, the specimens were placed between the pulling head and the fixed base. The tests were completed in a displacement-controlled testing machine, with a 10 mm/min rate.

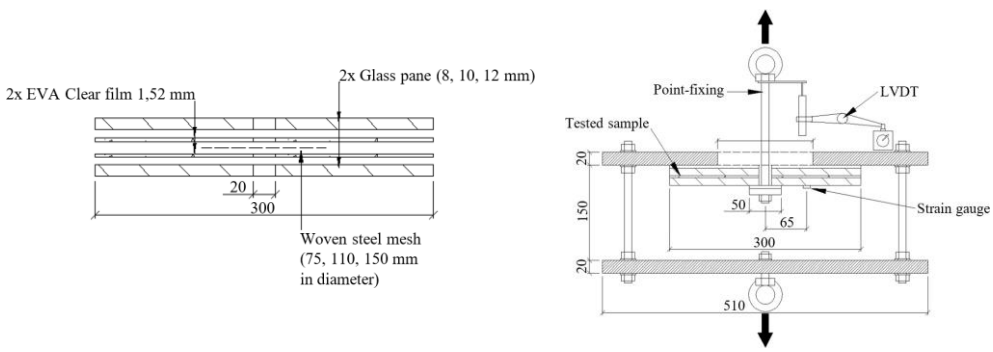

a) b)

Fig. 4. In-plane loading: tested sample (a) and test set-up (b).

Fig. 5a displays a sample in a post-breakage phase. Similarly to the in-plane loading, all samples displayed the same structural behaviour during testing. The initial phase showed the elastic response of the sample to the load, as seen in the relationship between the load and displacement. Once the glass failed, there was a sudden decrease in force due to the loss of tensile stiffness from the fractured glass. The samples then underwent progressive degradation from further loading, where the force initially increased and then decreased until failure. The load's maximum value in the post-breakage state ($P_{cr,max}$) is considered ultimate, and a comparison is presented in Fig. 5b. The reinforcing mesh clearly enhances the ultimate load. The increase in ultimate load increases with the diameter of the reinforcement.

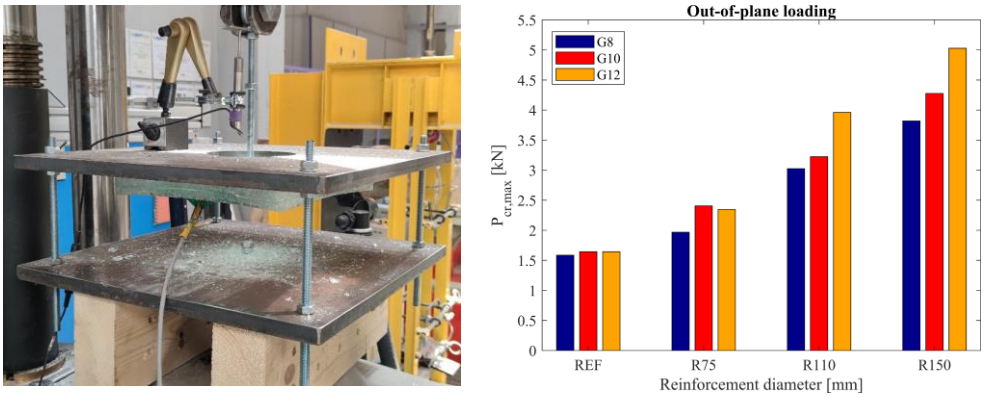

a) b)

Fig. 5. Out-of-plane loading: sample in the test set-up (a) and mean values of ultimate load (b).

3.3 Combined in-plane and out-of-plane loading

Tests were conducted to determine the load capacity under combined in-plane and out-of-plane loading. These tests were crucial as they correspond to the actual loading of a point connection in a typical glass canopy with diagonal steel rods. A spatial testing machine was utilized, as shown in Fig. 6a, with the force directed at a 45- degree angle to provide simultaneous load perpendicular to the sample and in its plane. The rate of displacement was 10 mm/min until the force stabilized after glass failure. Conclusions drawn from the tests include an apparent increase in the post-critical force when using reinforcing meshes in glazing units. The higher post-critical force value with increasing diameter of the disc used, the highest percentage increase in the post-critical force was observed in the experiments. Fig. 6b provides a visual representation of these findings.

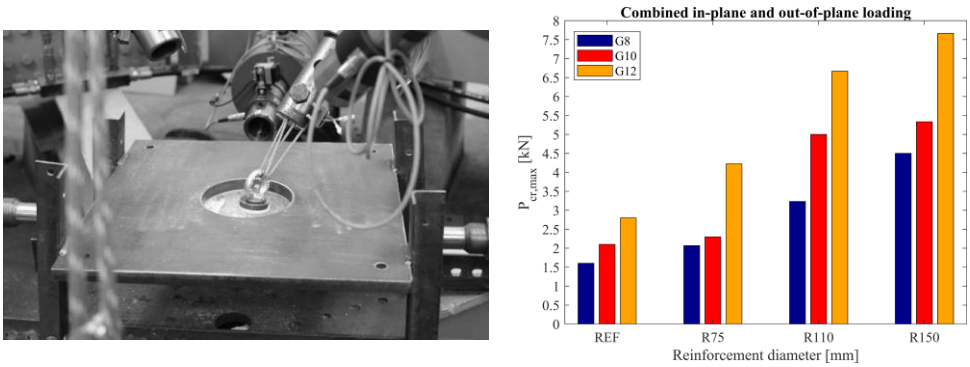

a) b)

Fig. 6. Combined loading: sample in the test set-up (a) and mean values of ultimate load (b).

4 Conclusions

This section presents a summary of tests that aimed to verify the effectiveness of reinforcing the laminated glass samples with a woven steel mesh laminated into the interlayer. The studies used various loading configurations to simulate typical loads for point-supported glass elements. Based on the research conducted, the following conclusions can be drawn.

All samples presented a progressive mechanism of failure. In the first phase, the relationship between the load and the displacement indicated the sample's elastic response to the load. Following the failure of the glass, there was a sudden decrease in force due to the loss of tensile stiffness by the fractured glass. In this stage, the interlayer mainly takes over the load. Due to further loading, the force initially increases and then decreases until the ultimate failure that is related to the failure of the film. In all loading configurations, an apparent increase in the ultimate loading in the post-breakage phase can be observed for reinforced samples compared to the reference specimens. It proves the effectiveness of local reinforcement of laminated glass with a woven steel mesh laminated into the interlayer on the post-critical load-bearing capacity.

The findings derived from this study are limited to the specific tests conducted within this research. The outcomes may differ based on the testing procedures and the physical properties of the samples, including their geometrical parameters and materials. Evaluating the load-bearing capacity of glass laminates after breakage is complex task, and additional research is necessary for other setups and varying environmental conditions.

Acknowledgments

This research was funded by the ongoing research project "Innovative solution for point-fixed laminated glass with improved capacity after glass fracture" (LIDER/34/0125/L-11/19/NCBR/2020) financed by the National Centre for Research and Development (NCBR) within the LIDER XI Program.

References

1. M. Patterson, Structural glass facades and enclosures. (Wiley, New York, 2011).
2. X. Centelles, J.R. Castro and L.F. Cabeza, Experimental results of mechanical, adhesive, and laminated connections for laminated glass elements – a review. Eng. Struct. **180**, 192–204 (2019). https://doi.org/10.1016/j.engstruct.2018.11.029
3. M. Martín, X. Centelles, A. Solé, C. Barreneche, A. Inés Fernández and L.F. Cabeza, Polymeric interlayer materials for laminated glass: A review. Constr. Build. Mat. **230**, 116897 (2020). https://doi.org/10.1016/j.conbuildmat.2019.116897
4. A. Vedrtnam, S.J. Pawar, Laminated Plate Theories and fracture of laminated glass plate – a review. Engineering Fracture Mechanics **186**, 316–330 (2017). https://doi.org/10.1016/j.engfracmech.2017.10.020
5. K. Grębowski, K., A. Wróbel, Architectural and Urban Planning Solutions for the protection of heritage buildings in the context of terrorist attacks: Following the example of Passive Protection Systems. Buildings **12(7)**, 988 (2022). https://doi.org/10.3390/buildings12070988
6. G. Royer-Carfagni, M. Silvestri, Fail-safe point fixing of structural glass. new advances. Eng. Struct. **31(8)**, 1661–1676 (2009). https://doi.org/10.1016/j.engstruct.2009.02.050
7. I. Stelzer, M. Singh Rooprai, Post Breakage Strength Testing for Overhead Laminated Glass. Challenging Glass 5 - Conference on Architectural and Structural Applications of Glass (2016). https://doi.org/https://doi.org/10.7480/cgc.5.2265
8. C. Zhao, J. Yang, X. Wang, I. Azim, Experimental investigation into the post-breakage performance of pre-cracked laminated glass plates. Constr. Build. Mat. **224**, 996–1006 (2019). https://doi.org/10.1016/j.conbuildmat.2019.07.286

9. L. Biolzi, S. Cattaneo, M. Simoncelli, Post-failure behavior of 2-ply laminated glass plates with different interlayers, Engineering Fracture Mechanics **268**, 108496 (2022), https://doi.org/10.1016/j.engfracmech.2022.108496
10. F. Bos, C. Louter, F. Veer, Structural Glass Beams with Embedded Glass Fibre Reinforcement. Challenging Glass 2 - Conference on Architectural and Structural Applications of Glass (2010).
11. C. Bedon, C. Louter, Structural glass beams with embedded GFRP, CFRP or steel reinforcement rods: Comparative experimental, analytical and numerical investigations. J. Build. Eng **22**, 227–241 (2019). https://doi.org/10.1016/j.jobe.2018.12.008
12. M. Achintha, T. Zirbo, Developments in GFRP Reinforced Bolted Joints in Glass. Challenging Glass 6 - Conference on Architectural and Structural Applications of Glass (2018). https://doi.org/10.7480/cgc.6.2153
13. M. Achintha, T. Zirbo, GFRP reinforced high performance glass–bolted joints: Concept and experimental characterization. Constr. Build. Mat. **274**, 122058 (2021). https://doi.org/10.1016/j.conbuildmat.2020.122058
14. M. Achintha, B. Balan, Mechanical prestressing of annealed glass beams using pretensioned GFRP: Characterisation and potentiality. Structures **20**, 11–19 (2019). https://doi.org/10.1016/j.istruc.2019.02.017
15. M. Kozłowski, D. Wasik, K. Zemła, Monotonic and Creep Studies on the Pull-through Resistance of Laminated Glass with Locally Embedded Steel Mesh. Materials **15(20)**, 7083 (2022). https://doi.org/10.3390/ma15207083
16. M. Kozłowski, D. Wasik, Wpływ lokalnego wzmocnienia na nośność pokrytyczną szkła laminowanego mocowanego punktowo. Materiały Budowlane 1(12), 18–20 (2022). https://doi.org/10.15199/33.2022.12.04
17. M. Kozłowski, D. Wasik, K. Zemła, Increased post-breakage strength of point-fixed laminated glass with locally embedded woven steel mesh, in Proceedings of the 4th International Conference on Materials Design and Applications 2022, University of Porto, Porto – Portugal, 7-8 July 2022