Simulation of passenger movement dynamics in a vehicle

Michał Liss[1], *Roman* Zinko[2] , *Yaroslav* Voityk[2] , *Oleh* Polishchuk[3], *Mykola* Rubanka[4]

[1]Faculty of Mechanical Engineering, Bydgoszcz University of Life Sciences and Technology, 7, Kaliskiego str., 85-796, Bydgoszcz, Poland
[2]Lviv Polytechnic National University, St. _ Bandery Street, 12, Lviv, 79013, Ukraine
[3]Khmelnitskyi National University, Instytutska Street, 11, Khmelnytskyi, 29000, Ukraine
[4]Kyiv National University of Technologies and Design, 01011, Ukraine

Abstract. A feature of the braking dynamics of a road train is the occurrence of shock loads between its links, which under certain conditions can significantly impair its stability. At the same time, there is a significant increase in dynamic loads on the support-coupling device, the destruction of which can lead to an emergency situation. It is suggested to use computer modeling in addition to bench tests to diagnose the condition of traction and coupling devices. It makes it possible not only to duplicate field tests, but also to reduce their costs, to apply methods of theoretical forecasting and determination of the strength of units of traction and coupling devices of trailers and towed vehicles. In the case of a semi-trailer, the impact of the tractor is modeled taking into account the initial lateral stiffness of the pivot pin, which indicates the elasticity of the suspension, tires, chassis and support-coupling device of the tractor-trailer on the level of the ground surface. The load on the finger of the hinged-coupling device during computer modeling was estimated by the amount of stress concentration on the surface of the finger. The greatest local stresses were observed in the area of the finger's phalanx, and the maximum deformation of the finger did not exceed 0.061 mm. Bench tests with the same tensile test force as in the calculation method showed that the difference in the values obtained by these two methods was 10-3 mm, which is included in the permissible measurement error (± 1.6•10-3 mm). The combination of bench tests and computer modeling is also relevant at the design and testing stages of agricultural, forestry and special purpose vehicles and machines.

1 Introduction

The braking process of a road train largely determines the stability of course movement and ensures the safety of movement. A feature of the braking dynamics of a road train is the occurrence of shock loads between its links, which under certain conditions can significantly impair its stability. At the same time, there is a significant increase in dynamic loads on the support-coupling device, the destruction of which can lead to an emergency situation. In towed vehicles aggregated with tractors, when driving on public roads, all traction force and dynamic loads are transmitted through mechanical coupling devices, the risk of accidental disconnection can cause serious consequences for road safety.

The characteristics of the forces acting on the hinged device can be used as a source of primary information for diagnosing the condition and predicting its changes during operation. It will also allow the implementation of Directive 71/320 of the EEC and the single technical requirements of UNECE Rules 13, which require the mandatory installation of anti-lock systems, which will ensure a reduction of dynamic loads on the coupling devices when braking the main ATZ [1,2].

Such values can be obtained by means of diagnostic bench tests or simulations.

Bench tests make it possible to identify the advantages and disadvantages of newly designed coupling devices and those already in use in a short period of time and at lower costs compared to field tests, to perform quality control and to provide recommendations for painting serial samples, to determine their condition, to perform research and development work character for future studies of complex phenomena of dynamic interaction of links of motor transport trains.

Overview of the status of the issue.

The equipment is known, which is intended for testing or diagnosing mechanical connections between the tractor and the trailing equipment, namely for the coupling devices that are installed for connection with the trailing equipment [3].

The mechanical coupling device is fixed on the frame of the equipment so that, in the event of a load, it does not deviate significantly relative to the test equipment and safety devices (Fig. 1). The horizontal components of the forces acting on the longitudinal axis of the tractor together with the vertical components of the forces form the basis of the test loads.

Fig. 1. Equipment for testing coupling devices with load application in horizontal and vertical directions [3].

To register applied loads and displacement, measuring devices with the maximum permissible measurement error are used: load ± 500 N; displacement ± 0.01 mm.

The coupling device must meet the specified characteristics and be mounted on the test bench with all the elements necessary for its installation. The installation must be reliable so that the elements in the connection of the unit and the base plate do not have a significant deviation. The device should not have additional support during loading, except for the fastening elements provided by the design [4].

The trailer coupling loader (Fig. 2) is designed to measure the push force of the trailer coupling in the range from 0N to 5000N with an accuracy of ± 2% [5].

Fig. 2. Trailer coupling loader [5].

It consists directly of a mechanical loading device, a measuring strain gauge and a digital converter with an LCD display on which the measured values are displayed. Therefore, it can work with other diagnostic equipment, for example, with any types of brake stands (META, GARO, BM Autoteknik, Maha, Hofmann, Bosch, CARTEC, NUSSBAUM and others). This loader does not need a compressor, receiver, manometer and additional strain gauges to work. The built-in strain gauge provides high measurement accuracy.

With the current development of computer technology, applied mathematics and software, new opportunities have appeared for the study of the dynamics of trailer and semi-trailer vehicles and their units. Computer modeling, research, as well as testing and diagnostics of the tractor-trailer (semi-trailer) system are promising. The use of computer models is based on the reproduction of processes in a virtual environment similar to real mechanical processes.

Research on computer models has a number of indisputable advantages compared to tests on real stands, namely: lower costs of forces, materials and funds; the possibility of conducting research according to the widest program, taking into account the factors that affect coupling devices, which is not always possible during bench tests [6].

2 Presenting main material

For tank-semi-trailers of the frameless load-bearing type, the question of the strength of the pivot of the support-coupling device for typical load dynamics during operation, namely during braking, was considered [7]. In the case of a semi-trailer, the impact of the tractor is modeled taking into account the initial lateral stiffness of the pivot pin, which indicates the elasticity of the suspension, tires, chassis and support-coupling device of the tractor at the level of the ground surface [8].

The following technical requirements must be met during modeling for the purpose of diagnosing the pin structure:

- the axis roll center corresponds to the level of the earth's surface;
- the construction of the vehicle is considered rigid;
- the vehicle is installed symmetrically to its center line;
- tire and suspension deformations are linear;
- the transverse deformation of the suspension is zero.

The calculation is made for conditions of maximum load on the pin: a loaded vehicle and intensive braking conditions. In this state of maximum load, the tanker truck is fully loaded without exceeding the maximum permissible weight and maximum permissible wheel loads [9].

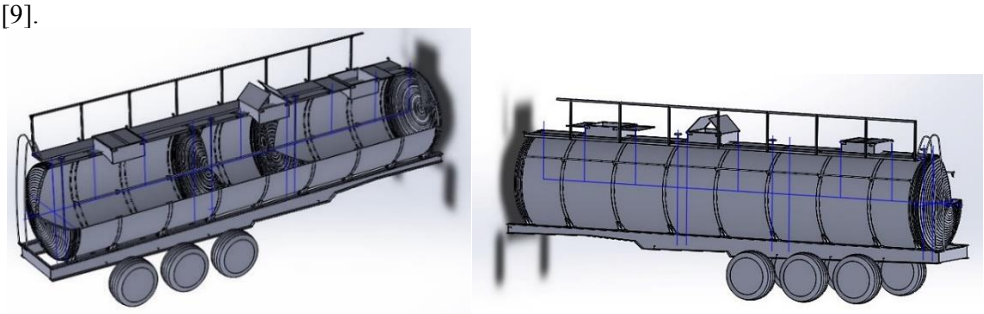

Fig. 3. Tank truck accepted for calculation.

The load on the pivot of the support-coupling device was calculated during braking with an initial speed of v = 60 km/h and a coupling coefficient ϕ_{sc} = 0.7 and is shown in Fig. 4, the material of the finger is structural steel with mechanical characteristics: yield strength σ_t = 620 MPa, tensile strength σ_v = 720 MPa, Young's modulus E = 2.1*105 MPa, Poisson's ratio

μ = 0.27, shear modulus G = 7.8*104 MPa.

Modeling of the impact load also established that to reduce the stress concentration, the surface of the finger attachment in the semi-trailer socket must be made conical (conicity no more than 1:8), while the value of the local stress is reduced by 11%, and the yield factor of the material is increased by 2.9%.

The load on the finger of the hinged-coupling device was estimated by the value of the stress concentration on the surface of the finger. The greatest local stresses were observed in the area of the finger's phalanx, and the maximum deformation of the finger did not exceed 0.061 mm.

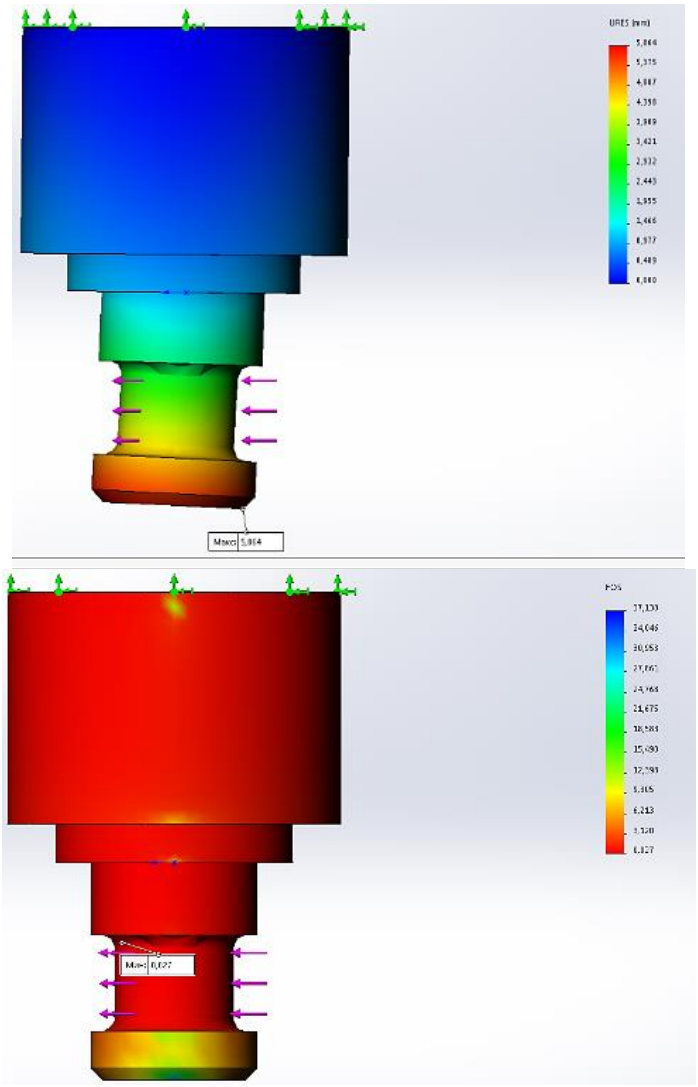

Fig. 4. Loading of the pivot of a tank truck with transverse forces and determination of their critical values for bending.

Bench tests with the same tensile test force as in the calculation method showed that the difference in the values obtained by these two methods was 10-3 mm, which is included in the permissible measurement error (± 1.6•10-3 mm).

3 Conclusions

It is suggested to use computer modeling in addition to bench tests to diagnose the condition of traction and coupling devices. It makes it possible not only to duplicate field tests, but also to reduce their costs, to apply methods of theoretical forecasting and determination of the strength of units of traction and coupling devices of trailers and towed vehicles. This approach is also relevant at the design and testing stages of agricultural, forestry and special purpose vehicles and machines.

References

1. DSTU UN/ECE R 13-09:2002. Uniform technical prescriptions for the official approval of road vehicles of categories M, N and O with regard to braking (UNECE Regulation No. 13-09:2000, IDT). - K.: State Committee of Ukraine on Technical Regulation and Consumer Policy, 180 p. (2002)
2. DSTU 3649:2010. Wheeled vehicles. Requirements for the safety of the technical condition and control methods. - K.: Derzhspozhivstandard of Ukraine, 28 p. (2011)
3. M 06:2018 Methodology of static testing of coupling hinges of tractor trailers and trailed agricultural machines. - Input 2019-07-12. - Kherson: PF UkrNDIPVT named after L. Pohorilo,7 p. (2018)
4. Agricultural and forestry wheeled tractors. The connections are mechanical between the tractor and the trailer. Test methods: DSTU 7819-2015. — [Effective from 2015-01-01]. - K.: Derzhspozhivstandard of Ukraine, 13 p. (2014)
5. Trailer hitch loader [Electronic resource] – Resource access mode: https://zapadpribor.com/ua/navantazhuvach-zchipnoho-prystroyu-prychepiv-vtt/ (access date: 11/15/2023)
6. O. Mitrofanov. Forecasting and determination of strength indicators of traction and coupling devices of agricultural and cargo machinery / O. Mitrofanov, M. Podolskyi, I. Lilevman, O. Lilevman // Agricultural machinery and equipment: forecasting, design, testing, issue **25** (39). pp.54-62 (2019)
7. Zinko R.V. Study of the support-coupling device of the tank-semi-trailer according to UNECE Regulation 13. / R.V. Zinko, O.Z. Gorbai, Y.L. Kraynyk // International scientific and practical conference "The latest technologies for the development of automobile transport" October 16-19. Kharkiv: HNADU, pp. 272-273 (2018)
8. DSTU UN/ECE R 111-00:2002 DSTU UN/ECE R 111-00:2002 Uniform technical prescriptions for the official approval of tank trucks of categories N and O regarding their resistance to overturning (UNECE Regulations No. 111-00:2001, IDT)
9. Heavy Duty Vehicle Weight Restrictions in the EU [Electronic resource] - Mode of access to the resource: https://www.acea.be/uploads/publications/SAG_23_ Heavy-Duty_Vehicle Weight Restrictions in_the_EU.pdf P. 4 (date application: 15.11.2023)