The influence and application of SiC MOSFET driver modules in the contemporary power electronics industry

Yulin Chen[1], *Chengcheng* Wu[2,*] *and Siting* Zhao[3]
[1] Institute of Electrical and Automation, Hefei University of Technology, Hefei, Anhui, 230009, China
[2] Institute of Artificial Intelligence and Electrical Engineering, Guizhou Institute of Technology, Guiyang, Guizhou, 550003, China
[3] Institute of Computer and Control Engineering, Northeast Forestry University, Harbin, Heilongjiang, 150036, China

Abstract. Technological progress has driven the rapid development of power electronics and enhanced the scale of the industry. SiC MOSFET devices have obvious advantages in applications such as high temperature resistance, high voltage resistance, and low switching loss. However, the different characteristics of such devices will bring related problems that seriously affect the reliability of the device and system. The drive circuit is effective in solving these problems with its small input resistance, parasitic inductance, and large enough drive voltage and current. Starting from the concept and related theoretical composition of SiC MOSFET driver module, this paper mainly analyses the impact of the driver module on the contemporary power electronics industry, and explains the application of the core research theory of the circuit to the industrial level. This paper also analyses the current situation of power electronics industry from the perspective of innovation theory, and looks forward to the prospect of power semiconductor devices.

1 Introduction

With the development and application of power semiconductor devices, their performance requirements need to be continuously improved. Therefore, a large number of scholars and experts have widely studied semiconductor switching devices represented by SiC MOSFET and GaN HEMT materials. Relying on SiC MOSFET high temperature resistance, high voltage resistance, fast switching speed, high thermal conductivity, low switching loss and other related characteristics, it is widely used in various conversion devices in the power electronics market [1]. However, these different characteristics introduce a new set of problems that interfere with the usefulness of SiC MOSFET devices.

SiC MOSFET driver module is a driving circuit that effectively solves the problems related to the different characteristics of SiC MOSFET devices, which is a collection of theoretical andqualitative research. In this paper, the planar structure and trench structure composition and principle of SiC MOSFET are analysed, and then the physical properties of SiC and Si materials are compared, and the five basic characteristics of SiC MOSFET are studied: transfer characteristics, output characteristics, blocking characteristics, body diode characteristics and dynamic characteristics. The paper also analyses the influence of SiC MOSFET driver modules on the contemporary power electronics industry, and describes that the driver circuit designed by optimizing the characteristics of SiC MOSFET can improve the switching working state of power electronic devices, improve the operating efficiency, reliability and safety of the device, and promote the overall development of the industry. In addition, the paper also studies the application of SiC MOSFET driver modules in the contemporary power electronics industry, analyses the drivers of electric vehicles and hybrid vehicles (EV/HEV), solar photovoltaic inverters and high-temperature environments to solve industrial hot problems, and finally explains the current status of power semiconductor devices and looks forward to their future development trends.

2 Structural and characterization analysis of SiC MOSFET

2.1 SiC MOSFET structural analysis

The structure of the unit cell unit inside SiC power MOSFET is mainly planar structure and trench

* Corresponding author: wu2010162096@outlook.com

structure. The structure of planar SiC MOSFET is shown in (a) of Figure 1, which has the advantages of simple process, good unit consistency and high avalanche energy. However, in this structure, the JEFT effect occurs when the current is confined to a narrow N-region close to the P region, which increases the on-state resistance; At the same time, the parasitic capacitance of the structure is also relatively large.

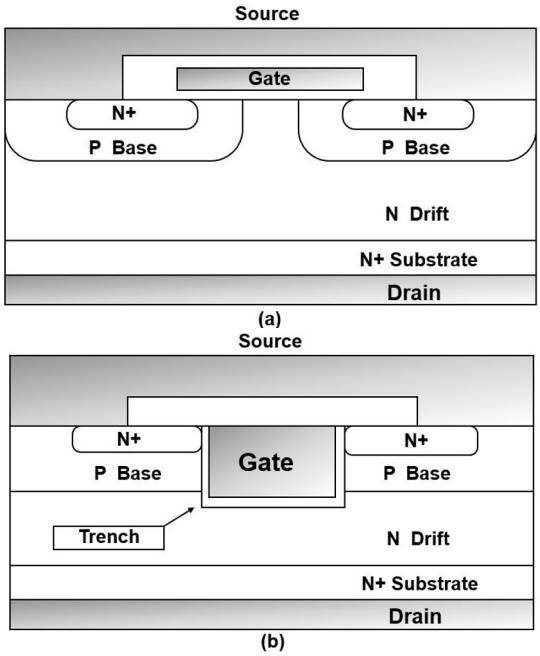

Fig. 1. Planar structure and trench structure of SiC MOSFET [2]

(b) of Figure 1 shows the trench structure of the SiC MOSFET. This structure inserts the gate into the substrate to form a vertical channel. Compared with the planar structure, the structure has a complex process, and the unit consistency and avalanche energy value are poor. However, this structure can increase the element density and cause the channel face to achieve the best channel mobility without JEFT effect, which makes the on-resistance of the structure significantly lower than that of the planar structure. At the same time, the structure has smaller parasitic capacitance, fast switching speed, and reduced switching losses.

SiC MOSFET is a MOSFET transistor based on SiC material and composed of three electrodes: source, drain and gate. The working principle of SiC MOSFET is to use the gate voltage to adjust the electric field distribution in the leakage junction area, so as to achieve the purpose of regulating the current across the two. With a gate voltage of zero, the electric field distribution in the leakage junction region coincides with the normal PN junction, and no current passes through. With a positive gate voltage, a reverse electric field is formed between the gate and drain junction regions, creating a conductive channel through which current flows. In the case of negative gate voltage, a positive electric field is generated between the gate and the drain junction region, which makes the electric field in the leak junction region denser and is not conducive to the conduction of current.

2.2 SiC MOSFET characterization

Power semiconductor devices have a crucial impact in the power electronics industry. Mao Peng and other researchers compared the physical properties of SiC materials and Si materials:

Table 1. Comparison of physical properties of materials

Materials	Band gap/eV	Insulation breakdown field strength/(MV*cm-1)	Electron saturation drift velocity/(cm*s-1)
Si	1.12	0.3	1
SiC	3.16	2.5	2

Table 1 clearly shows that the band gap and thermal conductivity of SiC materials compared with Si materials are about 3 times, the insulation breakdown field strength is more than 10 times higher, and the electron saturation drift rate is about 2 times. Based on the comparison of the characteristics of SiC materials and Si materials, SiC MOSFET also have smaller transconductance and reverse recovery currents than Si MOSFET, which are very helpful for reducing switching losses [2].

SiC MOSFET devices have five basic characteristics: transfer characteristics, output characteristics, blocking characteristics, body diode characteristics, and dynamic characteristics. The transfer characteristic curve of the device refers to the drain-source current IDS and gate-source voltage relationship curve, which indicates the control capability of VGS to IDS, as shown in (c) of Figure 2.

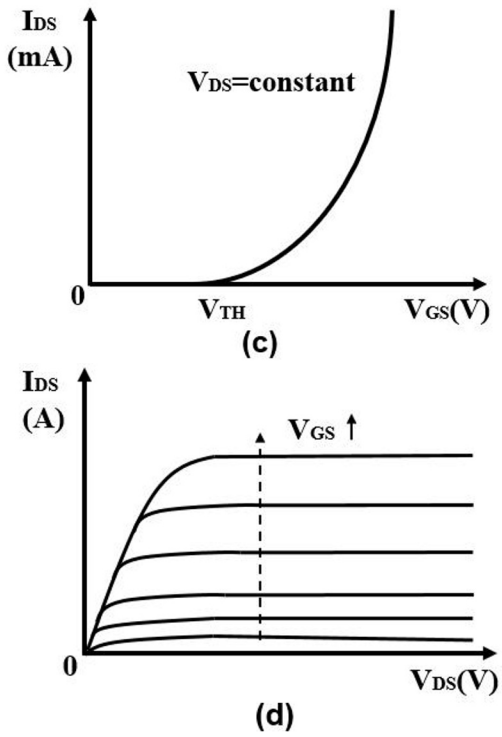

Fig. 2. Transfer characteristic curve and output characteristic curve of SiC MOSFET [3]

The output characteristic curve refers to the curve of the leakage current change with the drain terminal voltage when the gate-source voltage is greater than the threshold voltage, as shown in (d) of Figure 2. Blocking characteristics mainly refer to the device through thinner epitaxy and higher miscellaneous to achieve higher breakdown voltage and lower on-resistance. A body diode is a parasitic diode formed by a P-type base region and N-epitaxy in a planar structure. Dynamic characteristics include capacitance, switching speed, and synchronous rectification [3].

3 Analysis of the influence of SiC MOSFET driver modules in the contemporary power electronics industry

3.1 Improve the switching working state of power electronic devices

In the contemporary power electronics industry, the working condition of good power electronic devices directly affects their development trend and quality level. Due to the increase of the switching frequency of SiC MOSFET devices, the parasitic parameters seriously affect the switching characteristics of the device and increase the switching loss of the device. At the same time, the increase in voltage and current stress will also affect the stability of the converter. In order to effectively solve the problems of SiC MOSFET device characteristics in the contemporary power electronics industry, the driver circuit plays an important role [4]. Through the experimental simulation and data results of the driving circuit, the switching time can be effectively shortened, the switching loss can be reduced, and the power electronic devices can work in a relatively ideal working state. Jiang Jia proposed that the traditional gate drive method changes the driving resistance to control the switching speed, and reducing the switching loss will cause a large voltage or current overcharge, but reducing the voltage or current through the traditional method will sacrifice the loss at different stages, which has great limitations. Compared with this method, the key parameters affecting the switching speed are analyzed driving voltage and driving resistance, the compromise between SiC MOSFET switching loss and voltage/current overshoot is optimized, and the voltage-type drive circuit is designed to control the speed of different stages of the switching process, and the current-type drive circuit directly controls the driving current of each stage, which effectively reduces the switching loss [5].

By improving the working state of power electronic devices, SiC MOSFET drive circuit effectively solves the related problems in the switching process of the device, comprehensively promotes the optimization, improvement and development of the power electronics industry, and lays a solid foundation for the analysis and expansion of the drive field.

3.2 Improve the operational efficiency, reliability and safety of the device

The rapid development of SiC MOSFET drive modules has improved the operating efficiency of power electronic devices, ensuring the reliability and safety of the devices. Based on its strict assumptions, careful logical judgment and clear and intuitive theoretical analysis, the driving circuit provides us with clear conclusions, and shows its different functions through scientific basis, which solves many major problems that need to be studied by SiC MOSFET devices under different characteristics. For example, by optimizing the traditional active drive circuit, the voltage and current spike, oscillation, and crosstalk performance is verified on the double-pulse test platform. Finally, the synchronous buck converter built suppresses these problems, reduces the switching loss of the device, and improves the conversion efficiency of the synchronous buck converter [6]. In view of the deterioration of the

shutdown transient characteristics of SiC MOSFET devices, Yu Baowei designed a multi-stage level shutdown driver circuit to reduce the shutdown delay time and suppress the problems of shutdown overcharge voltage, shutdown loss, and voltage and current oscillation [7]. Wu Jingjing uses discrete devices to design a driver circuit with power amplification, short-circuit protection, undervoltage protection, soft shutdown and other related functions, enabling it to drive the normal turn-on and turn-off of SiC MOSFET devices [8]. The design of the drive circuit usually needs to consider the power supply, logic level conversion, drive signal conditioning, current amplification and temperature over-temperature function protection to achieve efficient and reliable power conversion and control, the above scheme with different methods to overcome the technical problems in the practical application of the power semiconductor device, so that the practicality of the device in different aspects has been significantly enhanced, expanding the advantages in the field of power electronics.

The operating efficiency, associated reliability and safety of the device largely determine the development and desirability of the device. The research of driving circuits has achieved many scientific and theoretical results, adapted to the sustainable development of the contemporary power electronics industry and provided new impetus, and accelerated the optimization of industrial structure and resource allocation. The designed drive module serves as a bridge to the advancement of device technology in the power electronics industry and avoids unnecessary risks.

3.3 Promote the overall development of the industry

With the continuous advancement of power semiconductor devices, their application scale in the power electronics industry is also expanding. However, SiC MOSFET as an innovative power semiconductor device still have many shortcomings in the application field, which has led a large number of researchers to explore driver modules to solve these shortcomings. The impact of SiC MOSFET driver circuits in the power electronics industry is mainly reflected in improving performance conversion efficiency, increasing power density, improving system reliability, and reducing cooling requirements. It brings significant improvements in the design and performance of power electronics, helping to drive the development and application of power electronics.

4 Application of SiC MOSFET driver module in contemporary power electronics industry

4.1 Electric and hybrid vehicles (EV/HEV)

SiC MOSFET are widely used in power inverters for electric and hybrid vehicles. Jeffrey FEDISON proposed that the power switching conversion system used in electric vehicles and hybrid electric vehicles includes traction inverter, AC input on-board charger, fast charging function and auxiliary function power supply, which compares the performance of silicon-based IGBT and SiC MOSFET commonly used in traction inverter, showing that SiC MOSFET has the advantages of low conduction loss, no PN junction voltage drop, minimal recovery charge of intrinsic diode and high operating temperature resistance. The article also covers selecting suitable drivers for SiC MOSFET using standard gate drivers, such as the ST TD350 driver developed by STMicroelectronics and other manufacturers. The active Miller clamping feature within this advanced gate driver saves negative voltage gate drive in most applications and allows the use of a simple bootstrap power supply to drive high-side drivers. In addition, there are two-stage shutdown functions with adjustable level and delay, which can prevent overcurrent and short-circuit conditions caused by large overvoltages caused by shutdown operation. A delay can be used to control the turn-on of the switch and prevent pulse width distortion [9].

4.2 Solar PV inverter

SiC MOSFET can be used in solar inverters to convert direct current generated by solar panels into alternating current, and its application in photovoltaic power generation systems and improving the energy conversion efficiency of photovoltaic inverters have a certain role. However, improving the conversion efficiency requires reducing the loss of the switch, so Wang Qingli designed a driver circuit that meets the requirements according to the characteristics of SiC MOSFET [10]. The overall block diagram is shown in Figure 3.

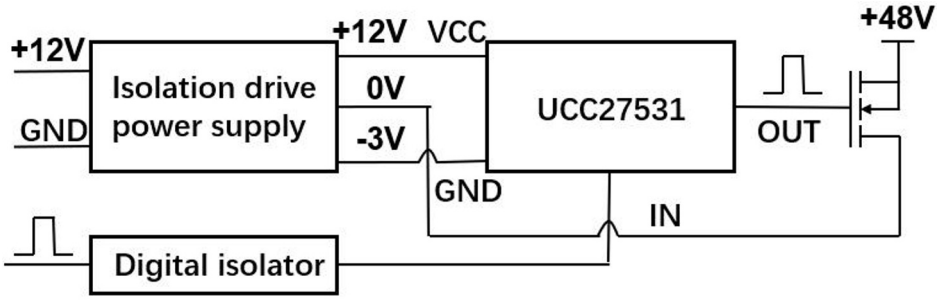

Fig. 3. Overall block diagram of the drive circuit [10]

In this design, the isolated drive power supply uses a forward topology with open-loop control. UCC27531 is an integrated driver chip suitable for IGBT and SiC MOSFET that can provide voltage 10V~35V, provide output current 2.5A and sink current 5A, small package size, input signal TTL and CMOS level compatible. The digital isolator adopts ISO7420, adopts bidirectional channel design, low power consumption, and can provide voltage 3~5V.

Solar photovoltaic power generation is an important part of distributed renewable energy, its proportion and growth rate in power generation are increasing, and the drive circuit can improve the energy conversion efficiency for it.

4.3 High temperature applications

SiC MOSFET have excellent high temperature performance. Compared to traditional Si MOSFET, SiC MOSFET in high-temperature environments suppress the degradation of conduction characteristics and the increase in leakage current, making them ideal for high-temperature applications. According to the analysis of the high-temperature drive structure, Xu Shuai improved the shortcomings of various topologies, and then proposed a new SiC MOSFET high-temperature driver circuit [11].

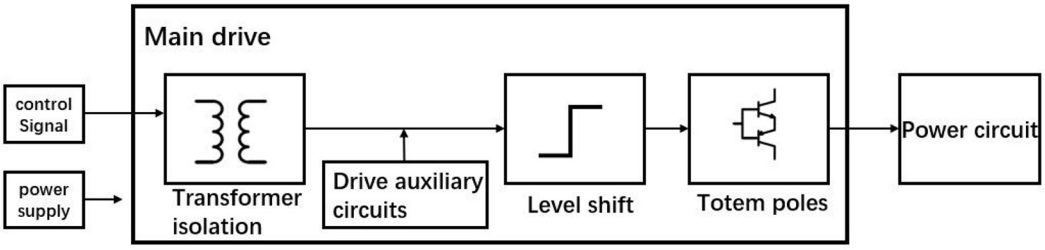

Fig. 4. Main drive circuit system block diagram [11]

Figure 4 is the block diagram of the main drive system of the circuit, the main drive circuit includes transformer isolation, drive auxiliary circuit, level shift circuit and totem pole circuit. First, the control signal is input and galvanically isolated through transformer isolation, then the control signal is transmitted to the level shift circuit through the drive auxiliary circuit, so that the amplitude of the signal rises to the driving voltage amplitude level, and finally the totem pole circuit enhances the driving ability of the circuit.

This driver circuit mainly analyses the effect of temperature rise on the parameters and performance of the switching device, and optimizes the SiC MOSFET in a high-temperature environment through a series of countermeasures. SiC MOSFET driver modules improve the efficiency of devices in high-temperature environment applications, and have obvious guiding effects on the development of the power electronics industry.

5 Current situation of modern power electronics industry

The contemporary power electronics industry has a rapid development and continuous innovation trend in power semiconductor device technology. With the continuous development of SiC power switching devices such as (MESFET, IGBT, SIT, GTO, BJT), the research and development of power semiconductor devices has become an important development direction in the field of power electronics. Since the new MOS devices, power semiconductor device technology has penetrated into people's daily lives. It is a vital component of power electronics systems for controlling and converting electrical energy.

Power semiconductor technology is developing towards high temperature, high frequency, low power consumption, high power capacity and intelligent, systematic, manufacturing technology has entered the deep submicron era, new structure, new process

silicon-based power devices are emerging one after another, and approaching the theoretical limit of silicon materials, new materials represented by SiC power semiconductor devices are gradually maturing [12].

The performance of power semiconductor devices continues to improve, including higher voltage and current tolerance, lower turn-on and turn-off losses, higher switching speeds, and better thermal stability. These performance improvements enable power semiconductor devices to be widely used in high-efficiency conversion, power-saving, and high-reliability applications. In order to improve the efficiency and reliability of power electronic systems, the trend of integration and modularization of power semiconductor devices is increasing. Integrated technology can reduce the connection resistance and inductance between components, improving system efficiency and response speed. The modular design simplifies system installation and maintenance and increases system reliability and scalability. With the development of the Internet of Things, artificial intelligence and digital technology, the intelligent and digital control of power semiconductor devices has also become an important trend. Intelligent power modules and digital control technologies enable accurate power conversion and monitoring, improving system response speed and energy efficiency.

Due to the limitations of SI materials in high frequency, high voltage, high power, etc., the industry will also focus on the research and development and application of new materials, new materials should have a larger bandgap band, higher electron mobility and thermal conductivity, small dielectric constant, can achieve higher switching frequency and higher operating temperature, while reducing power loss and other advantages, promote the development of power semiconductor device technology.

In general, the contemporary power electronics industry shows a continuous innovation and development trend in power semiconductor device technology, and the application of new materials, integrated and modular design, and intelligent and digital control are the main trends. Continuous advances in these technologies will further drive the efficiency, reliability and sustainability of power electronic systems.

6 Conclusion

This paper mainly explores the structure and characteristics of SiC MOSFET, shows the role of SiC MOSFET more clearly, and also studies the influence and application of SiC MOSFET driver module in the contemporary power electronics industry, analyses its value component, and finally elaborates the current status and future prospect of power semiconductor devices. At present, there are many deficiencies and deficiencies in the power electronics industry, and the overall level is still far from the advanced level, which is in a passive state in the market and innovation, which seriously restricts the competitiveness and development of the industry. SiC MOSFET driver module relies on highly accurate experimental simulation to build a highly reliable circuit model, and promotes more accurate and scientific theory and practice to promote the development and progress of industrial reform. With the continuous evolution of the power electronics industry, the drive module will greatly break through its theoretical constraints and application problems, and the in-depth development and wide application of the drive circuit is the inevitable product of the integration of the times and the industry, which brings great vitality and development opportunities to power semiconductor devices.

Authors Contribution

All the authors contributed equally and their names were listed in alphabetical order.

References

1. B. Zhang, J. Xu, Q. Qian, Z. Zhang, S. Xie, J. Power Supply, **14**(04), 39-51 (2016).
2. P. Mao, X. Chan, W. Zhang, Power Electron. Technol., **51**(09), 24-27 (2017).
3. Q. Chen, University of Electronic Science and Technology, Chengdu (2017).
4. T. Ba, Beijing Jiaotong University, Beijing (2016).
5. J. Jiang, Huazhong University of Science and Technology, Wuhan (2020).
6. Y. Wang, Tianjin Polytechnic University, Tianjin (2021).
7. B. Yu, Beijing Jiaotong University, Beijing (2021).
8. J. Wu, Beijing Jiaotong University, Beijing (2018).
9. J. Fedison, Chin. Electron. Business Situ., (11), 39-42 (2019).
10. Q. Wang, Shandong University of Science and Technology, Qingdao (2017).
11. S. Xu, Xidian University, Xian (2019).
12. B. Zhang, Z. Li, J. Fang, Chin. Integr. Circuit, **7**, 8-12 (2003).