Stress analysis of pipelines with small misalignment under internal pressure using fast modelling system ABAP

Sunting Yan [1, 2, *], Zhongqiang Liu [1, 2], Jiansheng Hu [1, 2], Yonggui Chen [1, 2], Xiaoli Shen [3], Guoyang Teng [1, 2]

[1] Zhejiang Academy of special equipment science China
[2] Key Laboratory of Special Equipment Safety Testing Technology of Zhejiang Province China
[3] Zhejiang institute of mechanical& electrical engineering co. LTD., China

Abstract. This paper presents a numerical finite element analysis of pipelines with small misalignment under internal pressure using a developed fast pipeline modelling system ABAP using Python development environment of ABAQUS. The effect of small misalignment is shown to affect at most 10% of stress levels. Extensive parametric analyses have been conducted on the pipe length, pipe thickness. Pipe length has trival effect on non-uniform stress distribution when length/diameter ratio is greater than 1. For thinner pipe, misalignment amplifies the circumferential non-uniformity more significantly than thicker pipe. This paper serves to enhance the understanding of pipes with small installation misalignment defects under pure internal pressure.

1. Introduction

Pipelines under internal pressure may experience burst failure and lead to economic loss and threats to safety of humans. The assessment of integrity of pipelines with various kinds of defects is pivotal to maintain safe operation.

There are various researches on these aspects. For example, Chen et al.[1] presented an analytical method to calculate the burst pressure of long corroded pipelines under internal pressure. The existence of corrosion flaws reduces the burst pressure. Furthermore Jin et al.[2] conducted integrity assessment of the pipelines containing an isolated corrosion pit by the similar analytical method. Ye et al.[3] innovatively presented an analytical large deformation collapse model of pipelines under excessive external pressure by including the effect of plastic hardening of materials. Similarly Yan et al.[4] studied the collapse failure and equal potential energy load of shallow cylindrical shells. A beam-model was developed by Yan et al.[5] to investigate the corrosion-induced thickness loss on the critical collapse pressure through the tangent modulus method to account for plasticity effect. Netto et al.[6] also studied the burst pressure of pipelines when initial thickness loss was considered. Finally Ye et al.[7] and Yan et al.[8] presented analytical investigations of corroded pipes and shallow cylindrical shells. The thickness non-uniformity was shown to affect significantly the collapse pressure.

From above, the thickness-loss defect's effect on critical pressure has been well understood. But in some occasional case, especially during installation, pipes may be welded imprecisely and it leads to some misalignment defect as illustrated in Fig.1. The assessment of the severity of the misalignment defect is critical for safety maintenance of the entire piping system. Thus this paper presents some finite element analyses of pipelines with misalignment defect under internal pressure based on our previously developed fast piping modelling system ABAP. Extensive parametric analyses(based on linear perturbation analysis in ABAQUS) are conducted to illustrate the effect of thickness, misalignment and pipe lengths on the stress distribution.

Figure 1. A realistic example of pipes with small misalignment

* Corresponding author: yansunting@zju.edu.cn

2. Finite element model description

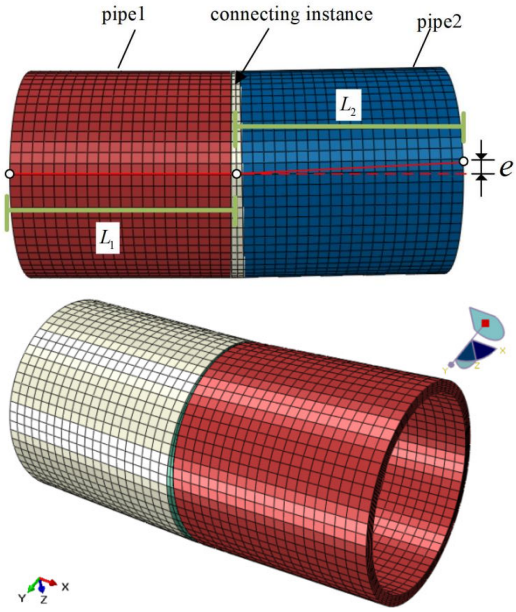

Figure 2. Model parameters of two pipes with misalignment

Fig.2 shows the finite element models and parameters. The model consists of two pipes indexed as pipe1 and pipe2 with lengths L_1, L_2, outer diameter $D_1, D_2 = 1\text{m}$ and thicknesses t_1, t_2 respectively. The misalignment is modelled by the parameter e defined as the deflection distance between center point of right end cross-section of pipe2 and the expected center point if pipe1 and pipe2 are in straightline. Thus e / L_2 determines the misalignment angle. To connect pipes with misalignment, ABAP system(see section 4) automatically detects the misalignment defect and generats a connecting instance based on orphan mesh method in ABAQUS. The Dofs are fully coupled between connecting instance and pipes. Internal pressure is imposed on the internal surfaces of this assembly with end cap effect considered. The end cap effect is modelled by binding the nodes of two end cross-sections to reference points at centers through BEAM type constraints in ABAQUS and imposing forces normal to the bound cross-sections at ends of magnitudes equal to $p_i A_i$ where p_i is internal pressure magnitude and A_i is the internal area defined as $A_i = \pi / 4 \cdot (D_1 - 2t_1)^2 = \pi / 4 \cdot (D_2 - 2t_2)^2$. Note that in this paper $D_1 = D_2, t_1 = t_2$. By linear perturbation analysis, without loss of generality, internal pressure is fixed as 1MPa.

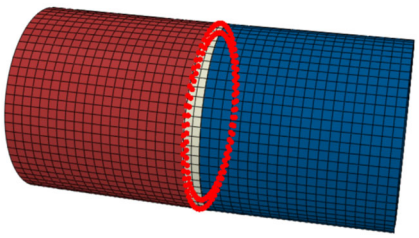

Figure 3. 64 pairs of points at one end of pipe1 for stress linearization

After calculation, we use linear stress linearization functionality in ABAQUS to use 64(64 elements are uniformly assigned in circumferential direction) pairs of points circumferentially to extract stress information along each line linked by each pair(see Fig.3 and Fig.5 for circumferential indices). Fig.4 shows the Mises contour when $L_1 = L_2 = 1\text{m}, t_1 = t_2 = 0.05\text{m}, e / L_2 = 0.07$ under 1MPa internal pressure. The mises stress level is higher at index 32 and lower at index 0. Fig. 5 shows the Mises stress contour when pipe is thicker with $t_1 = t_2 = 0.1\text{m}$ and similarly the convex part has lower stress level.

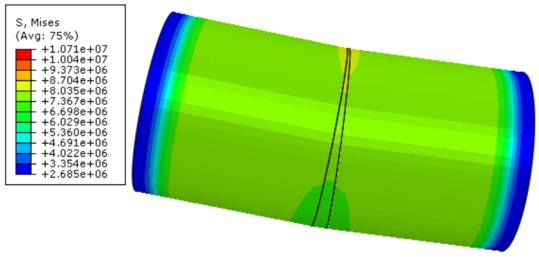

Figure 4. Mises stress contour when $L_1 = L_2 = 1\text{m}, D_1 = D_2 = 1\text{m}, t_1 = t_2 = 0.05\text{m}, e / L_2 = 0.07$

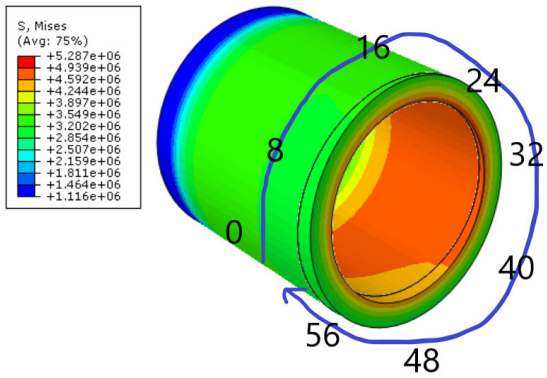

Figure 5. Mises stress contour when $L_1 = L_2 = 1\text{m}, D_1 = D_2 = 1\text{m}, t_1 = t_2 = 0.1\text{m}, e / L_2 = 0.07$

3. Parametric analysis on circumferential stress distribution

Fig. 6 shows the Tresca stress and Mises stress of linearized stress along each pair of points. By stress linearization the averaged stress along thickness is called membrane stress and the linearized stress at one end of thickness is called membrane+bending1(the other is called membrane+bending2 and in this analysis membrane+bending1 stress is always greater than membrane+bending2). Tresca stress of membrane+bending1 is largest and Tresca stress of membrane is lower. By definition Tresca stress is always larger than Mises stress. The abscissa from 0 to 63 means circumferential indices as in Fig.5. As index increases from 0 to 32, all stresses increase and by symmetry as index increases from 32 to 63, all stress decreases.

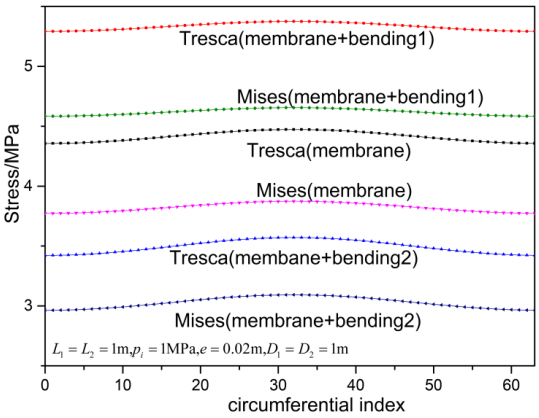

Figure 6. Tresca stress and Mises stress along circumferential direction

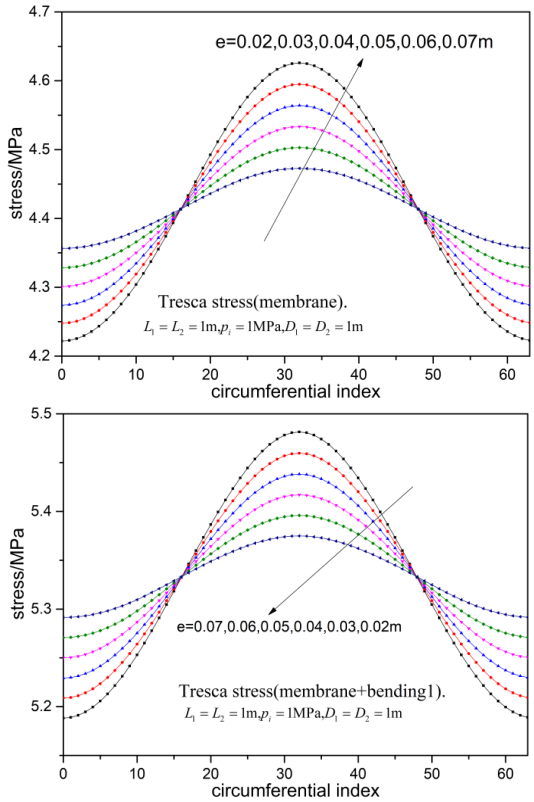

Figure 7. Effect of misalignment parameter e on the Tresca stress distribution

From Fig.7, the Tresca stress(membrane) and Tresca stress(membrane+bending1) are presented for various misalignment parameter e. As e increases, the effect of circumferential index is increasing. For example, at index 0, for e=0.02, the Tresca(membrane) stress is about 4.35MPa and at index 32, the corresponding stress is about 4.47MPa. However for e=0.07, the stress increases from about 4.22MPa to about 4.63MPa. The trend is similar for membrane+bending1 case. This analysis shows the significant effect of misalignment parameter e.

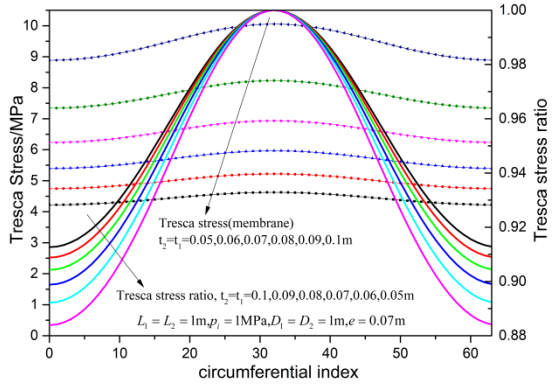

Figure 8. Tresca stress for various thickness levels

Fig. 8 shows the Tresca stress(membrane) for various thicknesses. The Tresca stress ratio is defined as the Tresca stress(membrane) divided by maximum Tresca stress(membrane) for all circumferential indices. As thickness decreases the non-uniformity of stress distribution increases significantly. For example when $t_1 = t_2 = 0.05\text{m}$, ratio has minimumvalue about 0.88 and when $t_1 = t_2 = 0.1\text{m}$ the ratio has minimum value about 0.91. This shows that thinner pipe is more significantly affected by misalignment defect. Fig. 9 presents the effect of pipe lengths on Tresca stress distribution by studying circumferential distribution of Tresca stress(membrane) for $L_1 = L_2 = 1,2,3,4,5,6\text{m}$ and fixed $e / L_2 = 0.07$, $t_1 = t_2 = 0.05, 0.1\text{m}$. All lines coincide indicating that pipe length has trivial effect on stress distribution.

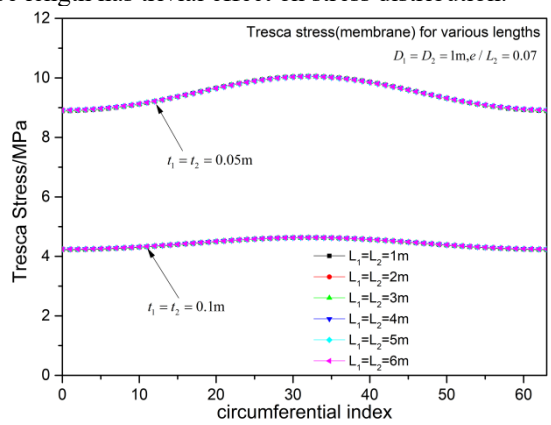

Figure 9. Tresca stress distribution for various lengths

4. Brief introduction of ABAP system

ABAP(namely ABAqus & Python) system was developed by Python by the first author and the kernel is based on secondary python development environment of ABAQUS software. The developed GUI interface is able to input the node locations, pipe connectivity information and geometric parameters. The kernel is responsible to accept the GUI-generated command text, interpret the text, build geometric pipe model, mesh the pipes by structural grids, assembly the pipes and impose the load to submit the job. All parametric analyses in this paper are based on this system quite conveniently without the tedious process of repeatedly building finite element models manually.

Fig.10 is the GUI of ABAP system supporting preview of the model.

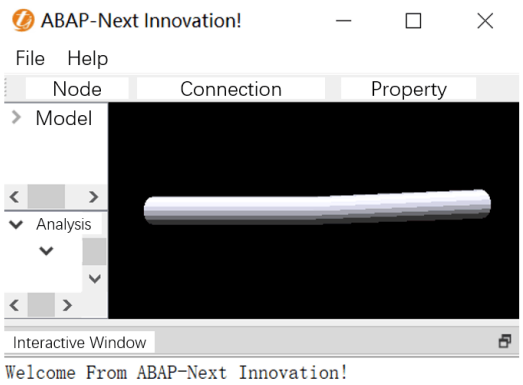

Figure 10. Interface of ABAP system and preview of pipes with small misalignment

5. Conclusions

(1) Under internal pressure the pipe misalignment defect slightly affects the circumferential stress distribution. For example, a 4-degree misalignment(corresponding to e/L2=0.07) leads to about 10% variation of stress circumferentially.
(2) The misalignment's effect is more significant when pipe is thinner.
(3) The pipe length has trivial effect on stress distribution circunferentially.
(4) All parametric analyses can be conveniently conducted by ABAP system without manually repeatedly building FEA models. This shows the effectiveness of ABAP system in enhancing the analysis efficiency.

Acknowledgments

This work was financially supported by natural science fundation of Zhejiang Province LQ21E050001, Science and technology plan project of Zhejiang Bureau of Quality and Technical Supervision (NO.20200307), Eyas Program Incubation Project of Zhejiang Provincial Administration for Market Regulation(No. CY2022221) and Public Project of Zhejiang Province LGG19E060004.

References

1. Chen ZF, Wang W, Yang H, Yan ST, Jin ZJ. On the effect of long corrosion defect and axial tension on the burst pressure of subsea pipelines. Applied Ocean Research. 2021 Jun 1; 111:102637.
2. Jin, Z.J., Qiu, C., Chen, Z., Yan, S.T. and Shen, X.L., 2020. Integrity assessment of the pipelines containing an isolated corrosion pit. Engineering Failure Analysis,113, p.104539.
3. Ye, H., Yan, S.T., Shen, X.L., Chen, Z.F. and Jin, Z.J., 2019. On the response of postbuckling of rings with strain hardening under external pressure. International Journal of Solids and Structures, 167, pp.127-141.
4. Yan, S.T., Shen, X., Chen, Z. and Jin, Z., 2018. Symmetric snap-through and equal potential energy load of non-uniform shallow arch under a concentrated load considering imperfection effect. International Journal of Mechanical Sciences, 146, pp.152-179.
5. Yan, S.T., Shen, X.L., Jin, Z.J. and Ye, H., 2016. On elastic-plastic collapse of subsea pipelines under external hydrostatic pressure and denting force. Applied Ocean Research,58, pp.305-321.
6. Netto, T.A., Ferraz, U.S. and Estefen, S.F., 2005. The effect of corrosion defects on the burst pressure of pipelines. Journal of constructional steel research,61(8): 1185-1204.
7. Ye, H., Qian, J., Yan, S., Jiang, C., Wei, L. and Jin, Z.J., 2016. Limit bending moment for pipes with two circumferential flaws under combined internal pressure and bending. International Journal of Mechanical Sciences, 106, pp.319-330.
8. Yan, S.T., Shen, X. and Jin, Z., 2019. Static and dynamic symmetric snap-through of non-uniform shallow arch under a pair of end moments considering critical slowing-down effect. Proceedings of the Institution of Mechanical Engineers, Part C: Journal of Mechanical Engineering Science, 233(16), pp.5735-5762.