Analysis of the use of transformable elements in intelligent tunnel ventilation systems

Omar Lanchava[1*], *Nicolae* Ilias[2], *Sorin Mihai* Radu[2], *Giorgi* Nozadze[3], and *David* Tsanava[1]
[1] Georgian Technical University, Tbilisi, Georgia
[2] University of Petrosani, Petrosani, Romania
[3] G. Tsulukidze Mining Institute, Tbilisi, Georgia

Abstract. All main and auxiliary equipment in the tunnel with an intelligent ventilation system are designed to ensure the safety. These systems "talk" and "listen" to each other, make decisions to switch on/off certain system(s) or part(s) thereof and duly inform the tunnel operator, who is authorized to the centralized control of all systems of necessity. The present article uses the numerical models to assess the efficiency of the transformable elements ensuring safe operation of the tunnels. The idea of their use is based on an artificial increase of the tunnel aerodynamic resistance by means of a flexible element, which will hamper the dissemination of combustion products, but not the movement of people through the tunnel and will help isolate clean and polluted air masses. Such resistance will be used to swiftly divide the tunnel carriageway into smaller sections what will help extinguish the fire as early as at its initial stage, prolong the evacuation time and save lives during the strong uncontrollable fires. As for the compact transformable element, it can be used in both, the operating and the planned tunnels, as it in practice does not reduce the volume of valuable underground space.

1 Introduction

By considering the strong fires in the tunnels of the world, the European Union paid particular attention to the Trans-European Network (TEN) recognizing the safety of the existing and planned tunnels as a priority. The strength, development scenario and dynamics of a fire may vary significantly depending on the tunnel geometry, topology and location, posing new problems in saving lives and extinguishing fires.

For the TEN tunnels with their length exceeding 500 m, the European Parliament and the European Council issued Directive EC2004/54 regarding the minimum level of safety. Under the Directive and expert opinions, fire safety expenses for road tunnels in the EU countries vary between €2.6-6.3 billion. €2.6 billion is needed for the ventilation systems and their improvement technology associated with fewer expenses [1, 2]. However, the construction and operation of the ventilation systems is becoming more expensive over the time due to the use of the ventilation systems equipped with smart, intelligent sensors.

* Corresponding author: o.lanchava@yahoo.com

© The Authors, published by EDP Sciences. This is an open access article distributed under the terms of the Creative Commons Attribution License 4.0 (http://creativecommons.org/licenses/by/4.0/).

Consequently, the present assessment is important, but yet outdated. Intelligent ventilation systems, alongside with traditional passive and active safety methods and systems, uses intelligent fire detection and information transmission systems. These systems, as already mentioned, "talk" and "listen" to each other, make decisions to turn on/off the system or a part of it, and inform the tunnel operator, who can centrally manage all systems as necessary.

Famous fires of recent years stimulated the process of finding the ways to improve ventilation and safety systems and relevant studies. Notable strong and destructive fires were the ones occurring in Mont Blanc, Gotthard, Viamala and other tunnels in Europe described in special literature [3] and some fires occurring after the publication of the mentioned literary sources, with a particularly strong one in Futuyu Tunnel, Hebei, China in 2017 taking away the lives of 15 people (and traumatizing 3 people) and bringing great economic losses [4]. The fire in an express tunnel of Korea in 2020 took lives of 4 people (and traumatized 43 people). The given works evidence that the sites of fire accidents in the underground space are accidental and consequently, fire may occur along any underground section of the transport system.

Fires are more common in the city road tunnels owing to intense traffic through them. For example, in Hamburg motor tunnel running under the Elbe riverbed, large and small fires are as common as once a month on average. It should also be noted that the number of human victims of fire incidents in the city tunnels is usually great complicating the evacuation.

The very first papers about the tunnel fire safety issues [5-10] consider such key terms and characteristics as critical velocity, backlayering length, dynamics and various scenarios of fire development, temperature propagation, heat flux, smoke stratification, etc., which are still topical to date.

Based on the mentioned papers, the backlayering length is defined as the distance of smoke propagation from the fire hearth against the ventilation current. This more often takes place when an air current moves from a high to low level and the hearth of fire is at a low point. In such a case, the fire products spread opposite the ventilation current. As the dynamic pressures developed by the fire and by the fan are algebraically summarized, in order to protect the tunnel section with clean air current in it against the smoke pollution, the fresh air current must have the velocity higher than the critical velocity. Thus, the fresh air current must not be polluted with tunnel smoke provided the velocity of the fresh air current is greater the critical velocity. In addition, often the stratification of smoke resulting from a fire is not maintained due to the high critical speed and intense turbulence.

A number of papers describe the methods to improve the existing tunnel ventilation and safety systems. As already mentioned, a number of authors have studied the fires in road tunnels for different aspects: e.g. the scenarios of underground fire propagation [2, 6, 12-16], temperature distribution and propagation issues in the tunnels [4, 17, 18], piston effect influence on the distribution of ventilation flow in underground space [11], underground fire development dynamics and their different scenarios [12, 19-21], propagation of smoke and toxic combustion products against the ventilation current direction [22-25] and theoretical and experimental study of critical velocities [24-28]. It would not be an exaggeration to say that work "The handbook of tunnel fire safety" [3] summarizes almost all-important papers published earlier.

2 Idea, results and discussion

As it was mentioned above, both, the traditional and new methods and their combinations are used to deal with the fire issue. Hardly inflammable materials are generally used both, in tunnel cladding and car designing. Sprinkler and drencher systems using both, the water and the fire-fighting additives with water are used to extinguish tunnel fires. Besides, a solution to divide the tunnels under construction into short sections with fireproof barriers to hamper

the propagation of fire and its harmful factors was proposed, but this method is not suitable for “old” tunnels following their geometry.

Besides, it should be noted that for “old” tunnels, where the space to accommodate similar fire-proof barriers is hardly available, various flexible barriers were proposed to swiftly divide the tunnel into small sections needing minimum of the valuable underground space. As you know, old tunnels have optimal dimensions in terms of traffic and there is no "extra" volume for other engineering devices. Below we give the typical curves of the efficiency of similar transformable system proposed by us based on numerical experiments. However, first, we would like to present convenient plans of intelligent ventilation systems, which can combine this novelty quite successfully.

One possible plan of the intelligent ventilation system is given in Figures 1-3. This is the case of a two-storey road tunnel with one-storey ventilation channels. A simplified plan of the two-storey ventilation tunnel with one-storey road tunnels is given in Figure 4.

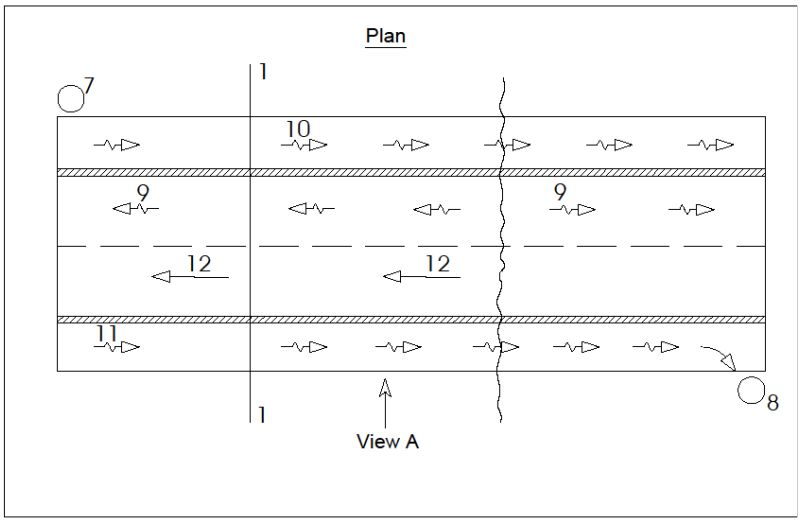

Fig. 1. Intelligent ventilation system (two-storey traffic tunnel), the plan: 1 – Two-lane one-way tunnel; 2 - Two-lane two-way tunnel; 3 – Fresh air zone – evacuation space with various communications: water supply, electrical supply, etc. 4 – Forced gravitational fans; 5 – Exhaust gravitational gratings; 6 – Jet fans; 7 – Two-step force fan; 8 – Exhaust fan to use in case of fire; 9 – Direction of air movement along the traffic carriageway; 10 - Direction of air movement in the evacuation space; 11 - Direction of air movement in case of fire; 12 – Direction of traffic flow; 13 – Diversion zone of fire products; 14 – Operating transformable element; 14 - Transformable element in a standby mode

The air in one-way parallel tunnels 1 and 2 operating under usual terms moves with the vehicle plunger effect. The intellectual sensors permanent control the air content. If the ventilation air is not sufficient or its quality is deteriorated, the jet fans (6) installed in the tunnel ceiling will be activated thus strengthening the plunger effect and air current. This effect is reached as the directions of the air arisen with jet fans and the traffic coincide. One tunnel (3) running parallel the road tunnels with permanently fresh air in it owing to fan (7), is designed for evacuation in case of strong (uncontrolled) fire, while another tunnel (13) is designed to exhaust toxic gases and soot caused by fires with fan (8). The transformable elements are used to swiftly divide the tunnel carriageway into short sections as shown in Figure 5. The operating transformable system (14) along a 300-meter-long section will

partially or fully cover the tunnel section. This helps the sprinklers and drenchers installed on the given local site to extinguish fire right in its initial phase. Toxic combustion products will not propagate to the other parts of the tunnel, as the fresh air supplied with gratings (4) will be exhausted with gratings (5). With strong uncontrolled fires, the ventilation plan on the local site on fire is the same what increases the evacuation time and serves the purpose to save lives. It should be noted that the forced and exhaust fans 7 and 8 give the necessary pressure to the air currents at necessary locations immediately after they are switched on as the pressure will propagate at the speed of sound, not speed of air movement.

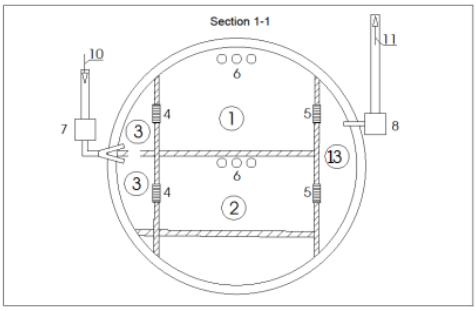

Fig. 2. Intelligent ventilation syste (two-storey traffic tunnel), Section 1-1. Numerical legend is given in Fig. 1

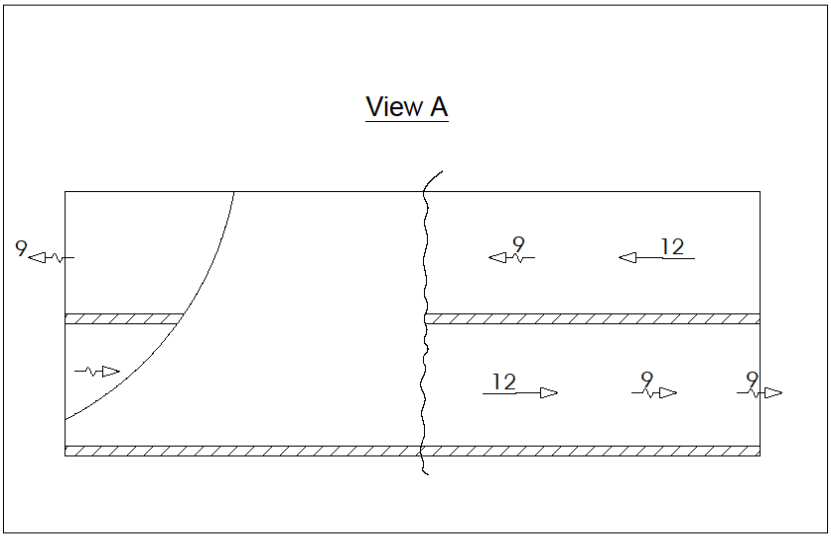

Fig. 3. Intelligent ventilation system (two-storey traffic tunnel). Numerical legend is given in Fig. 1

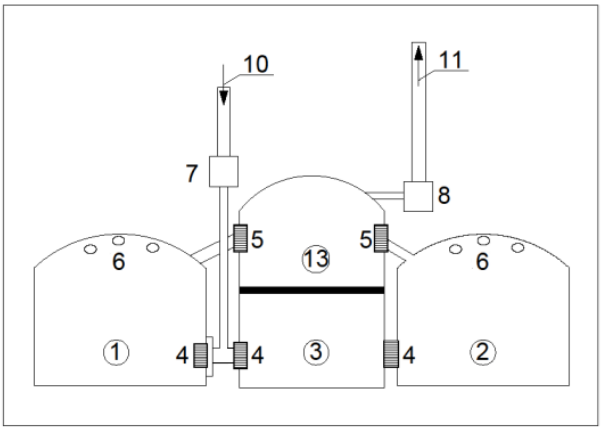

Fig. 4. Intelligent ventilation system (two-storey ventilation tunnel). Numerical legend is given in Fig. 1

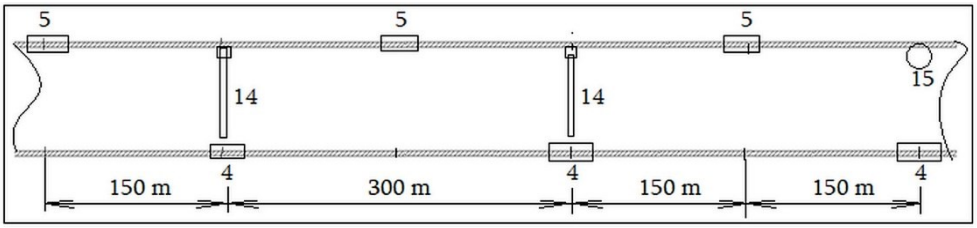

Fig. 5. Operating transformable system compatible with the intelligent ventilation system. Numerical legend is given in Fig. 1

The proposed method to use transformable systems implies the improvement of the ventilation techniques to hamper the propagation of harmful combustion products and save lives in case of fire, as road tunnel fires are still the high-risk challenges and a subject of intense engineering study.

Generally, a transformable system is used at locations hard to access for people. A fire hearth in road tunnels must be viewed as such a location, as the principle means for people at such locations to rescue is self-evacuation.

The transformable elements will be installed along the perimeter of the road tunnel cross section. They will be controlled with an automatic electric or mechanical driving system. The electric driving system is possible to control both, by a central and local control panel.

2.1 Description of numerical experiments

The numerical experiments were conducted for 30 MW fire when the tunnel is equipped with intellectual sensors and the flexible element is a part of the ventilation system to hamper the propagation of the damaging factors caused by a fire, but it will not hamper the movement of people and will save lives more efficiently.

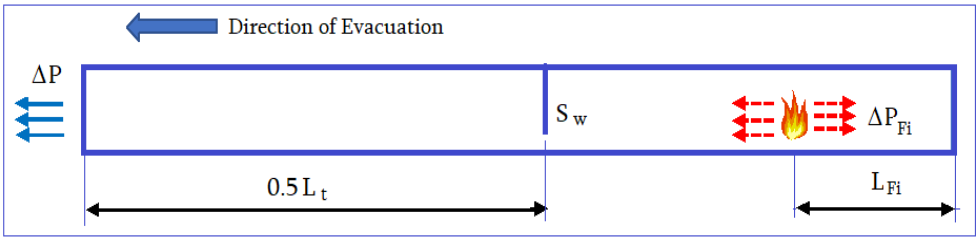

Fig. 6. Plan of the base pattern when the flexible element is installed in the central part of the tunnel and the hearth of fire is 100 m from the portal

The data of the base pattern given in Fig. 6 are as follows: tunnel length L_t = 800 m; tunnel cross sectional area S_t= 48 m^2; the hearth of fire is at the distance of L_{Fi}= 100 m from the right portal and the flexible element activated by the intellectual sensors is installed in the center of the tunnel, 400 m from the portal. The area of the flexible element is variable for different models characterizing tunnel cross section coverage index α. This index is calculated with formula: $\alpha = {S_w}/{S_t}$. S_w in the formula is the area of the flexible element. The numerical experiments were conducted for the following coverage values of tunnel cross section: α = 0; α = 0.5; α = 0.9. For the numerical problems, the following boundary conditions were given at the left portal: ΔP = 1 Pa; ΔP = 5 Pa and ΔP = 10 Pa. Numerical modeling time is 600 sec. A tunnel fire was realized on the example of polyurethane. We use the case of a simple reaction when average fractional dimensionless fraction of carbon monoxide (CO) formation is 0.2.

The damaging factors considered in the present study are as follows: increased concentrations of carbon monoxide (CO), decreased oxygen (O_2) concentration and variation of temperature distribution across the tunnel for 30 MW fire. During the numerical experiment, the metering devices used to measure the numerical values of the said damaging factors were installed on the virtual parallel plane of the tunnel base side, in every 100 m of the tunnel length, while the plane was distanced by 1.5 m from the bottom of the tunnel. Following the tunnel length (800 m), in the numerical experiments, the numerical values of the said factors were located at 8 different points.

In view of self-evacuation, the base pattern describes the most complex case when there is maximum distance to the nearest passageway, which must be overcome in order to move to the tunnel with fresh air.

The presented results show the distribution of the density of harmful factors of a tunnel fire with and without the light fire-proof transformable element. Figures 7-9 show the serial results of the numerical experiments, which depend on different boundary conditions (ΔP_{Li} = 1, 5, 10 Pa) and tunnel cross filling coefficient (α = 0; 0.5; 0.9). In case of a numerical simulation, the simulation time is 600 sec. In order to help understand the gained results, the color of the diagram was used to demonstrate the series developed depending on the coverage ratio of the tunnel cross section by a flexible partition and is presented with three colors: the red color describes the series of results (ΔP_{lp}= -1, -5, -10 Pa, α = 0), the green color describes the series of results (ΔP_{lp} = -1, -5, -10 Pa, α = 0.5) and the violet color describes the series of results (ΔP_{lp} = -1, -5, -10 Pa, α = 0.9).

For the analysis of the gained results, we compared the sites of localization of maximum concentrations of each series according to the damaging factors with the similar data of (α = 0.9), green (α = 0.5) and red (α = 0) series, e.g., in Fig. 7, for the distribution of CO density (α = 0,9) series, maximum CO density on the diagram of violet lines is fixed at 500 m and 700 m points. 700 m is the location of the fire hearth and is not of concern in view of the propagation of damaging factors. As for another point, 200 m from the fire hearth (500 m

point): density ρ_{1co} = 0.007 kg/m^3, from the green line series: ρ_{2co} = 0.012 kg/m^3 and from the red line series: ρ_{3co} = 0.015 kg/m^3, i.e., $\rho_{\min(500)} = \rho_{1(500)}$. Consequently, at this point (500 m point), the minimum divisible factor of the reduction of the carbon monoxide density can be interpreted as follows: $K_{co(500)} = {\rho_{2co(500)}}/{\rho_{1co(500)}} = 1.71$; $K_{co(500)} = {\rho_{3co(500)}}/{\rho_{1co(500)}} = 2.14$.

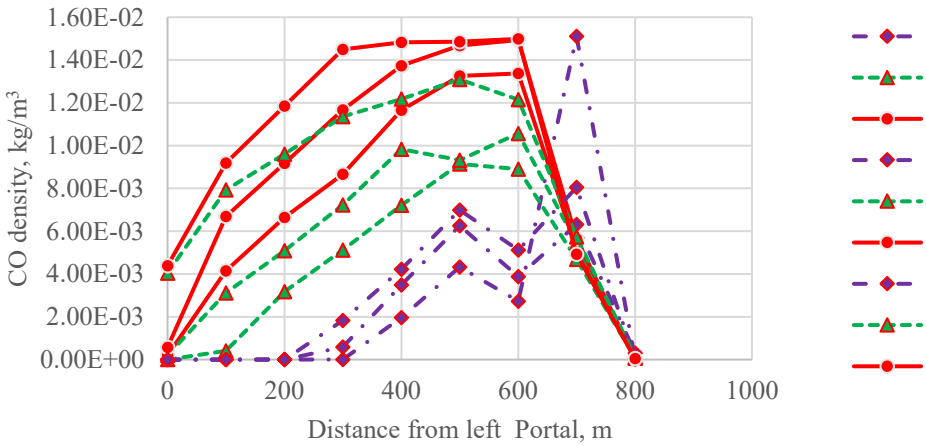

Fig. 7. Variability of the carbon monoxide (*CO*) density along the tunnel for the base pattern, when: 1 - ΔP = 1 Pa, α = 0.9; 2 - ΔP = 1 Pa, α = 0.5; 3 - ΔP = 1 Pa, α = 0; 4 - ΔP = 5 Pa, α = 0.9; 5 - ΔP = 5 Pa, α = 0.5; 6 - ΔP = 5 Pa, α = 0; 7 - ΔP = 10 Pa, α = 0.9; 8 - ΔP = 10 Pa, α = 0.5; 9 - ΔP = 10 Pa, α = 0

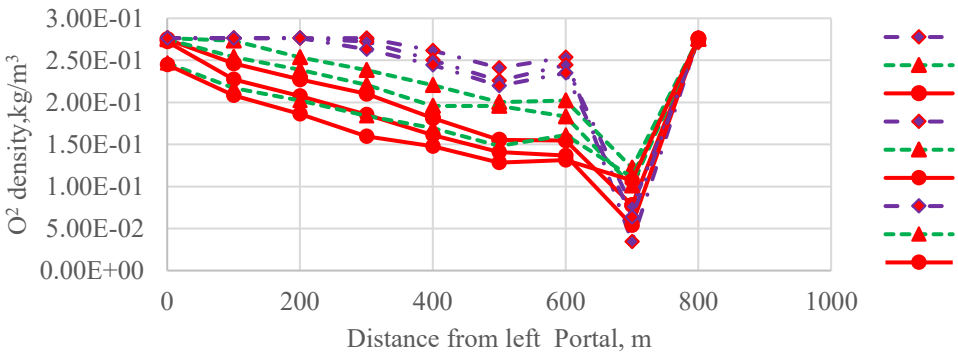

Fig. 8. Variability of oxygen (O_2) density along the tunnel for the base pattern, when: 1 - ΔP = 1 Pa, α = 0.9; 2 - ΔP = 1Pa, α = 0.5; 3 - ΔP = 1 Pa, α = 0; 4 - ΔP = 5 Pa, α = 0.9; 5 - ΔP = 5 Pa, α = 0.5; 6 - ΔP = 5 Pa, α = 0; 7 - ΔP = 10 Pa, α = 0.9; 8 - ΔP = 10 Pa, α = 0.5; 9 - ΔP = 10 Pa, α = 0

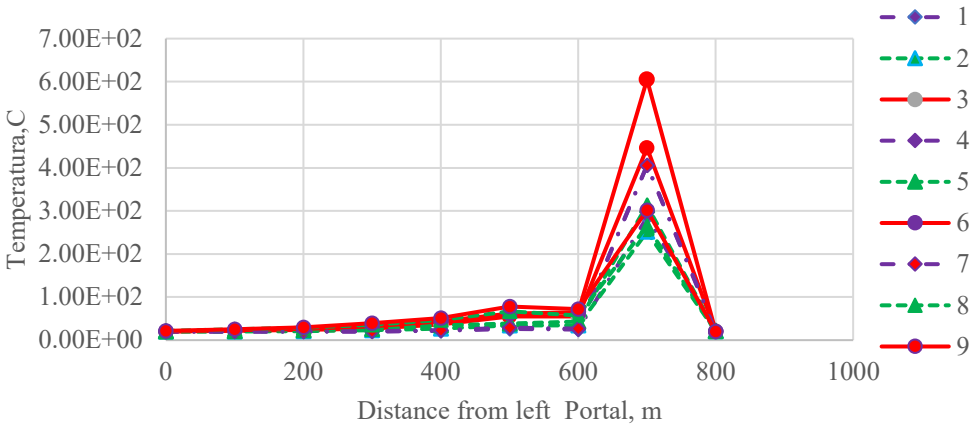

Fig. 9. Temperature variation along the tunnel for the base pattern, when:1 - ΔP = 1 Pa, α = 0.9; 2 - ΔP = 1 Pa, α = 0.5; 3 - ΔP = 1 Pa, α = 0; 4 - ΔP = 5 Pa, α = 0.9; 5 - ΔP = 5 Pa, α = 0.5; 6 - ΔP = 5 Pa, α = 0; 7 - ΔP = 10 Pa, α = 0.9; 8 - ΔP = 10 Pa, α = 0.5; 9 - ΔP = 10 Pa, α = 0

The proposed simple quantitative assessment of the flexible element effect can be used for the relative assessment of the hazardous state of harmful gases and for controlling the processes on its basis by using intelligent sensor systems. As the literary sources suggest [20, 23], a typical feature of a harmful factor of the temperature is that the process of temperature distribution is swiftly localized in the tunnel in case of fire and the radius of action of the dangerous temperature factor is approximately 200 m from the fire hearth for 30 MW fire (see Fig. 9). This example clearly evidences that the use of the light fireproof flexible element in the road tunnel in case of fire gives the possibility to prolong the time of self-evacuation of car passengers as expressed by a relative improvement of e the air toxicity index in the tunnel for the fixed time interval.

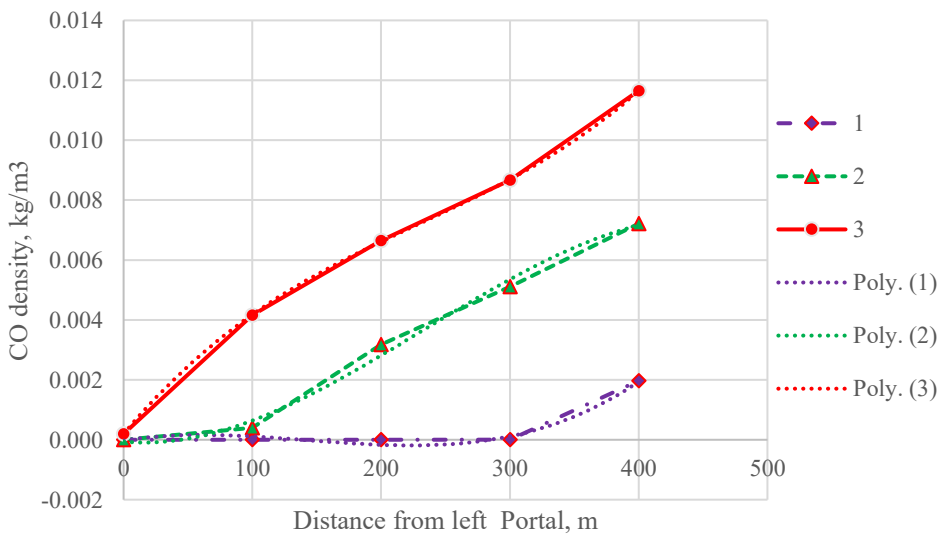

Fig. 10. Variation of the average carbon monoxide value along the evacuation distance

In view of practical use, the multi-parametric functional dependence of harmful factors can be deduced to the functional dependence as polynomial approximation according to the distance in the evacuation zone (0-400 m), along the tunnel length. On the given site, the determination coefficient of regression analysis of polynomial approximation R^2 is n fact within the range of 1 what evidences a high degree of approximation within the time limits of the given time $t = 600$ s.

$$\rho_{CO}(x) = x^3 - 350x^2 + 3500x - 1.5 \cdot 10^5, \quad R^2 = 0.9825, \ \alpha = 0.9 \quad (1)$$

$$\rho_{CO}(x) = x^3 + 500x^2 - 20000x - 3 \cdot 10^5, \quad R^2 = 0.9935, \ \alpha = 0.5 \quad (2)$$

$$\rho_{CO}(x) = x^3 - 500x^2 + 25000x - 10^6, \quad R^2 = 1, \ \alpha = 0 \quad (3)$$

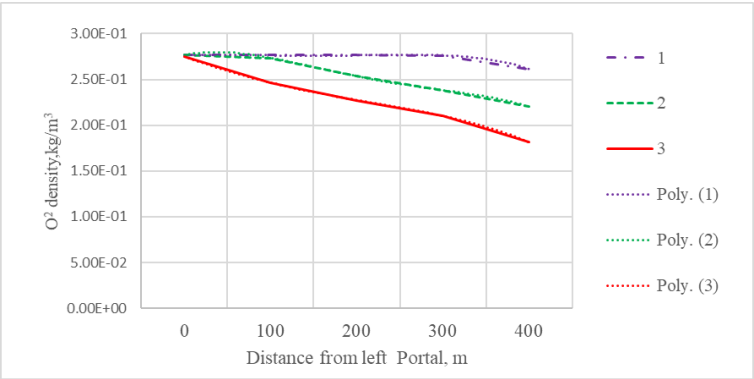

Fig. 11. Variation of the average oxygen value along the evacuation distance

$$\rho_{O_2}(x) = -x^4 + 10.2x^3 - 35.3x^2 + 50.5x + 436.5, \quad R^2 = 1, \ \alpha = 0.9 \quad (4)$$

$$\rho_{O_2}(x) = -x^4 + 13.42x^3 - 61.67x^2 + 104.3x + 170, \quad R^2 = 1, \ \alpha = 0.5 \quad (5)$$

$$\rho_{O_2}(x) = -x^4 + 4.33.2x^3 - 10.33x^2 + 50.5x + 144.33, \quad R^2 = 1, \ \alpha = 0 \quad (6)$$

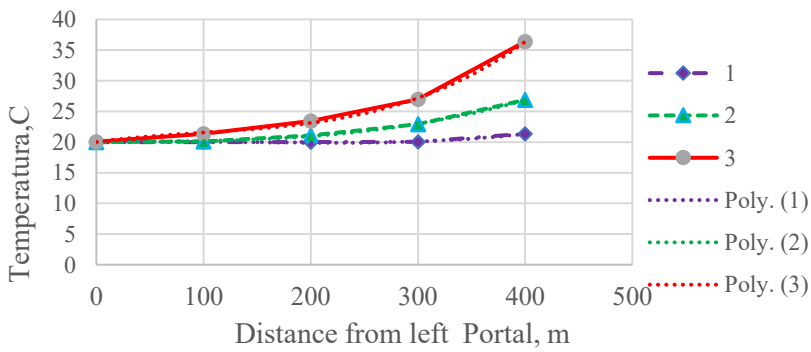

Fig. 12. Variation of the average temperature of ventilation air along the evacuation distance

$$T(x) = x^3 - 500x^2 + 4.4 \cdot 10^4 x + 5 \cdot 10^8, \quad R^2 = 0.9988, \ \alpha = 0.9 \tag{7}$$

$$T(x) = x^3 + 9x^2 - 700x - 19.98 \cdot 10^8, \quad R^2 = 0.9935, \ \alpha = 0.5 \tag{8}$$

$$T(x) = x^3 - 250x^2 + 5.9 \cdot 10^4 x + 19.98 \cdot 10^8, \quad R^2 = 0.9846, \quad R^2 = 1, \ \alpha = 0 \tag{9}$$

The density of carbon monoxide can be calculated by using the formulas given above. Formula (1) gives the sought value when the coverage of the tunnel cross section with the flexible element is 0,9 and 0,5 in formula (2), while the tunnel cross section is free from the flexible element in formula (3). The average value of pressure increase in numerical experiments was 5 Pa where x is the coordinate of the tunnel cross section from the left portal. Similarly, formulas (4)-(6) can be used to establish the type of variability of the average oxygen concentration by means of calculations and formulas (7)-(9) can be used to calculate average air temperature.

3 Conclusions

On the basis of numeral modeling results, we can assume that the spatial and time distribution of dangerous factors shows a sharp positive trend by using the transformable elements as compared to the case without similar equipment used in the tunnel. The rate of avalanche-like growth of toxic and harmful products: smoke, soot and high temperature is possible to reduce twice or 3-fold by using the transformable systems, whereas the period of self-evacuating of passengers will increase by 300 %. This is caused by a better vertical distribution of combustion products of different densities under the impact of the said elements.

The temperature-resistant transformable elements, which can be made with a nonwoven basalt fibber, are compact, light and competitive in terms of less material capacity, adaptability, simple installation, efficient control and opportunity to save the valuable underground space.

The established variation regularity of average values of harmful factors shows that in case of activated transformable element, in case of 0.5 coverage of the tunnel cross section, the concentration of carbon monoxide in the immediate vicinity of the flexible element decreases by 40%, oxygen concentration increases by at least 20% and the temperature decreases by 10°C.

This work was supported by Shota Rustaveli National Science Foundation (SRNSF) [Grant number AR-19-1936].

References

1. TRANS/AC.7/9, RECOMMENDATIONS OF THE GROUP OF EXPERTS ON SAFETY IN ROAD TUNNELS, UN, Economic and Social Council, Economic Commission for Europe (2001)

2. TRANS/AC.7/11, REPORT OF THE AD HOC MULTIDISCIPLINARY GROUP OF EXPERTS ON SAFETY IN TUNNELS ON ITS FIFTH SESSION, UN, Economic and Social Council, Economic Commission for Europe (2002)
3. A. Bird, and R. Carvel. *The handbook of tunnel fire safety*. Thomas Telford Publishing, Edinburg, UK (2012)
4. P. Lei, C. Chen, Y. Zhang, T. Xu, and H. Sun. Experimental study on temperature profile in a branched tunnel fire under natural ventilation considering different fire locations. International Journal of Thermal Sciences **159**, DOI: 10.1016 (2021)
5. P. Thomas. The movement of buoyant fluid against a stream and the venting of underground fires, Fire Research Station, http://www.iafss.org/publications/frn/351/-1/view/frn_351.pdf (1958)
6. J.P. Vantelon, A. Guelzim, D. Quach, D.K. Son, D. Gabay, and D. Dallest. IAFSS Fire Safety Science-Proceedings of the third international symposium. *Investigation of Fire-Induced Smoke Movement in Tunnels and Stations: An Application to the Paris Metro*, Edinburg, UK (1991)
7. P.H. Thomas. The movement of smoke in horizontal passages against an air flow, Fire Research Note, **723**, Fire Research Station, Watford, UK (1968)
8. W.D. Kennedy. Critical Velocity: Past, Present and Future. Seminar of Smoke and Critical Velocity in Tunnels, JFL Lowndes, London, 305–322 (1996)
9. C.K. Lee, R.F. Chaiken, and J.M. Singer. Interaction between duct fires and ventilation flow: an experimental study, Combustion Science and Technology **20**, 59–72 (1979)
10. Y. Oka, and G.T. Atkinson. Control of smoke flow in tunnel fires, Fire Safety Journal **25**, 305–322 (1995)
11. O. Lanchava, N. Ilias, G. Nozadze, S.M. Radu, R.I. Moraru, Z. Khokerashvili, and N. Arudashvili. FDS Modelling of the Piston Effect in Subway Tunnels. Environmental Engineering and Management Journal, **18**, **4**, 317-325 (2019)
12. O. Vauquelin, and D. Telle. Definition and experimental evaluation of the smoke "confinement velocity" in tunnel fires. Fire Safety Journal, **40**, 320-330 (2005)
13. O. Vauquelin. Parametrical study of the backflow occurrence in case of a buoyant release. Experimental Thermal and Fluid Science, **29**, 725-731 (2005)
14. W.K. Chow, Y. Gao, J.H. Zhao, J.F. Dang, C.L. Chow, and L. Miao. Smoke movement in tilted tunnel fires with longitudinal ventilation. Fire Safety Journal, **75**, 14–22. DOI: 10.1016/j.firesaf.2015.04.001 (2015)
15. Y.Z. Li, H. Ingason, and L. Jiang. Influence of tunnel slope on smoke control. RISE Research Institutes of Sweden, 22 (2018)
16. H. Ingason, and Y.Z. Li. Model scale tunnel fire tests with point extraction ventilation. Journal of Fire Protection Engineering, **21**(**1**), 5-36 (2011)
17. O. Lanchava, N. Ilias, S.M. Radu, and G. Nozadze. Heat and hygroscopic mass exchange modeling for safety management in tunnels of metro. Quality Access to Success, **20**, S**1**, 27-33 (2019)
18. O.A. Lanchava. Heat and mass exchange in permanent mine workings. Journal of Mining Science **1**(**6**), 87-92 (1982)
19. O.A. Lanchava. Heat and mass exchange in newly driven mine workings. Journal of Mining Science **1**(**5**), 99-104 (1985)
20. N. Ilias, O. Lanchava, and G. Nozadze. Numerical Modelling of Fires in Road Tunnels with Longitudinal Ventilation System. Quality Access to Success, **18**, S**1**, 77-80 (2017)
21. Y.Z. Li, and H. Ingason. Overview of research on fire safety in underground road and railway tunnels. Tunnelling and Underground Space Technology, **81**, 568-589. https://doi.org/10.1016/j.tust.2018.08.013 (2018)
22. G.H. Ko, S.R. Kim, and H.S. Ryo. An experimental study on the effect of slope on the critical. Journal of Fire Sciences, **28**, 27–47 (2010)
23. O. Lanchava, N. Ilias, and G. Nozadze. Some Problems for Assessment of Fire in Road Tunnels. Quality Access to Success, **18**, S**1**, 69-72 (2017)
24. Y.Z. Li, B. Lei, and H. Ingason. Study of critical velocity and backlayering length in longitudinally ventilated tunnel fires. Fire Safety Journal, **45**, 361-370 (2010)
25. Y.Z. Li, and H. Ingason. Effect of cross section on critical velocity in longitudinally ventilated tunnel fires. Fire Safety Journal, **91**, 303–311 (2017)
26. J. Kong, Z. Xu, W. You, B. Wang, Y. Liang, and T. Chen. Study of smoke back-layering length with different longitudinal fire locations in inclined tunnels under natural ventilation. Tunnelling and Underground Space Technology, **107**, 103663 (2021)

27. M.C. Weng, X.L. Lu, F. Liu, and C.X. Du. Study on the critical velocity in a sloping tunnel fire under longitudinal ventilation. Applied Thermal Engineering, **94**, 422–434 (2016)
28. O. Lanchava. Analysis of Critical Air Velocity for Tunnel Fires Controlled by Ventilation. Mining Journal **1** (**42**), 126-132 (2019)