Ground vibrations caused by wind power plant work as environmental pollution - case study

Sylwester Borowski[1,*]

[1]UTP University of Science and Technology, Al. prof. S. Kaliskiego 7, 85-796 Bydgoszcz, Poland

Abstract. The paper presents issues related to the impact of wind farms on the environment. Emphasis was placed on vibrations that are transferred to the ground through the foundations. As research has shown - a case study - vibrations are felt up to about 1000 m from wind farms. According to other literature sources, this may affect living organisms in the ground.

1 Introduction

The increasing demand for civilization for energy requires the construction of new power plants supplying eclectic energy to even the most distant places. At the same time, the growing threat of environmental pollution resulting from exhaust emissions, which also includes greenhouse gases, has increased interest in renewable energy sources. One of the ways to generate electricity by this way is to build wind farms [1, 2, 3].

In Polish conditions, Horizontal Axis Wind Turbines (HAWT) predominate in commercial applications. Such a turbine consists of a nacelle with a rotor placed on the tower. A rotor is used to convert wind energy into mechanical energy in the form of a rotary motion. The rotor is connected to a generator that converts rotary motion into electricity.

A typical synchronous generator produces electricity at speeds above 1500 rpm. Due to the large rotor diameters (e.g. Vestas V112 3 MW - 112 m), they must rotate at speeds resulting from the critical speeds of the blade ends. For this size of wind farms, the rotor speed is 15 (to 20) rpm. To obtain the right rotational speed of the generator, gears increasing the number of rotations are used in these constructions. The introduction of this structural element reduces the efficiency of energy conversion and increases the number of elements, which entails greater failure rate and the generation of additional waste (lubricants, oils). Gears and a high generator speed are also responsible for the higher noise and vibration emissions caused by the turbine. These types of turbines are called gear drive turbines.

Gearless turbines generate electricity in low-speed, multi-pole, synchronous ring generators. The rotor in this type of construction is connected directly to the generator, which according to the manufacturer causes an increase in electricity production. The advantages of this type of power plant include, apart from reducing the number of rotating elements (susceptible to wear), also reducing the sources of noise and vibration. The advantages of such a solution were noticed on the difficult German market, where the percentage share of the installed capacity of gearless turbines for this manufacturer is over 50% and increases. Other wind turbine manufacturers also offer such structures (GoldWind 1.5MW, Leitwind 1.5 to 1.8MW, Mtorres 1.65MW, XEMC 2MW, GE / ScanWind 3.5MW).

HAWT wind turbine rotors are most often built as three-blade, two or single-blade rotors found in older solutions are also found. Propeller blades are made of fiberglass or carbon reinforced with polyester. The use of carbon fibers allows you to increase the size of

* Corresponding author: sylwa@utp.edu.pl

the panels, which allows you to obtain greater power. The gondola has the ability to rotate 360 degrees so that it is always in the optimal position during work. This is possible by using a motor together with a gearbox to determine the position of the nacelle in relation to the wind direction. This information is obtained by top-mounted measuring instruments. The control system also uses this information to determine the blade pitch and generator load. In addition, the nacelle includes: a transformer, bearings, lubrication systems and a brake ensuring stopping the rotor in an emergency.

Wind power mast can be built as a closed pipe or truss. A truss tower requires less material at the same strength. However, the closed tower in the form of a pipe, according to popular opinion, looks more aesthetically pleasing and allows safe placement inside the apparatus necessary for the operation of the gym. A tower with a height equal to the diameter of the rotor is considered the most proportional and this is the standard height adopted by most manufacturers. Steel towers, 20-30 square meters in diameter, are delivered in parts to the construction site. The towers have a conical shape, with a diameter increasing towards the base. This shape ensures high strength and material saving. The prefabricated segments are assembled together at the gym assembly site. The 50 m high tower weighs approx. 40 tons.

The wind power plant is founded on a previously prepared foundation. Foundations for wind turbine towers are most often built as reinforced slab foundations.

In difficult areas or in order to save the amount of concrete intended for the foundation, prestressed foundation wells (PFW) and prestressed slab-pile foundations (PPF) are shown in Figure 1. The PFW foundation, otherwise a prestressed foundation well, consists of a reinforced concrete cylinder of the large diameter of row 4 -5 m and a length of 7.5-10.5 m. The cylinder is terminated on the underside of a reinforced concrete slab with a thickness of 0.90 m, while from the top a slab with a thickness of about 0.30 m. Inside the well is placed unpolluted soil from the excavation of the foundation space. The depth of PFW foundation depends on the applied loads coming from the turbine and the surrounding soil at the target location. The PPF foundation is the reinforcement of wind towers in the form of prestressed slab and pile foundations. The PPF foundation consists of a reinforced concrete slab with a diameter of approx. 7.5 m, a depth of approx. 1.5 m supported usually by 12-20 pieces, 10-15 m long piles distributed on a circle with a diameter of 6.0 m. Turbines with greater power than 2 MW may require more piles arranged in two rows [4].

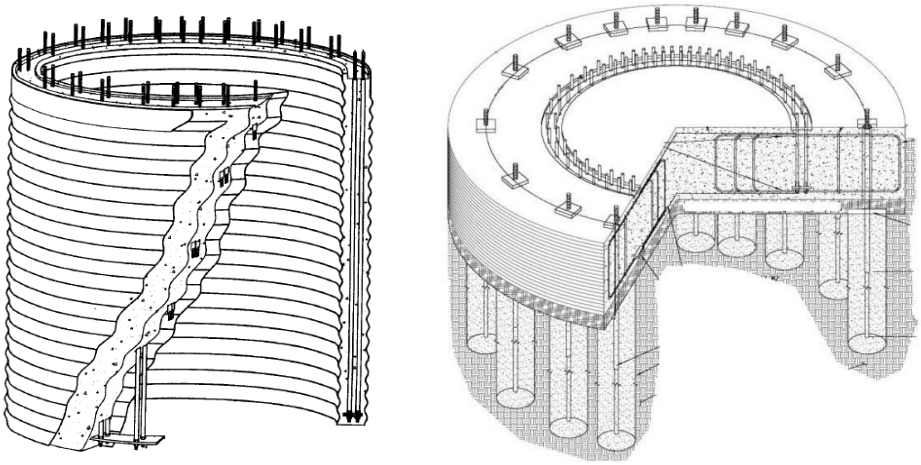

Fig. 1. Scheme of wind power plant foundations [6]: a - prestressed foundation well (PFW), b - prestressed plate and pile foundation (PPF).

As it results from the presented short characteristics, a wind power plant is a complicated system consisting of a wind turbine connected to a generator, together with all types of systems necessary for its operation. During its use, the gym is exposed to variable loads resulting from gusts of wind affecting both the rotor blades, as well as the tower and nacelle. These interactions are transferred to the foundation slab and further to the ground. Also, significant blade tip speeds and rotor operation in the air jet are a source of noise. The centrifugation of huge masses, which consists of the mass of the rotor, the mass of wheels and shafts as well as bearings, as well as the rotor of the generator is a source of vibration and noise. Even at home, humans and animals are exposed to wind farms. They are primarily infrasound that can penetrate through concrete partitions.

2 Vibrations and their impact on living organisms

Mechanical vibrations generated in the wind power plant are transferred through the foundation to the surrounding ground. Vibration can be generated as a result of normal operation and may increase as a result of damage [5]. A person exposed to this factor is exposed to damage to tissues and blood vessels. Prolonged exposure to vibration can cause lesions in the vascular, osteoarticular and nervous systems.

Changes in the osteoarticular system of the hand arise mainly as a result of local vibrations with frequencies less than 30 Hz. Observed include deformation of joint gaps, calcification of the joint capsules, periosteal changes, changes in bone tissue.

Disorders in the functioning of internal organs are mainly the result of stimulation of individual organs to resonance vibrations (the natural frequencies of most organs are in the range of 2 ÷ 18 Hz).

The functional effects caused by vibrations are [6]:

- increased motor reaction time,
- increased visual response time,
- disruption of coordination of movements,
- excessive fatigue
- insomnia
- irritability
- memory impairment.

As a result of research conducted in our own research team, the effects of noise, infrasound and vibration were found near the wind farm [7, 8].

3 Research methodology

The wind farm was the object of research carried out in Rypin - Rypałki. The wind turbine is located at 53.109670 north latitude, 19.434430 east longitude. The tested wind turbine was produced by Vestas. The installed V90 2 MW model has the following parameters [9]:

Rotor
Diameter: 90 m
Sweep area: 6.362 m2
Nominal turnover: 14.9 rpm
Rotation range: 9.0-14.9 rpm
Number of blades: 3
Mast
Hub height: 95 m
Weight
Gondola: 68 t
Rotor: 38 t
Tower: 200 t

The aim of the study was to assess the propagation state of ground vibrations generated by the wind power plant at a distance of up to 940 meters from the wind power plant mast. Preliminary tests were carried out to assess the level of vibrations emitted by the tested wind power plant. The tests were carried out using the characteristics of the vibration signal, which is a good carrier of information about the technical condition of the object.

The measurements of the characteristics of the vibration signal on the test stand were made using a single-axis piezoelectric sensor. This sensor was connected using shielded cables to the four-channel VIBDAQ+ data activation module.

The machine was directly picked up by a piezoelectric PCB Piezotronics sensor ICP model 352C68. The photo of the vibration sensor used during the experimental tests.

At first, vibration measurements were made on the wind power plant mast. Then measurements were taken in one direction from the wind farm, every 50 m. Due to the large number of results obtained, selected vibration signal reception points will be discussed.

3 Research results and discussion

The effective value of the vibration process signal was analysed (Fig. 2). The selected measure is one of the most commonly used to describe and quickly assess the level of vibration propagation in vibration diagnostics. It is used in asymmetrical vibrations and takes into account the average value in time domain [1].

The measurements were made for a wind speed of 3.5 m s-1 at a height of 2 m above ground level.

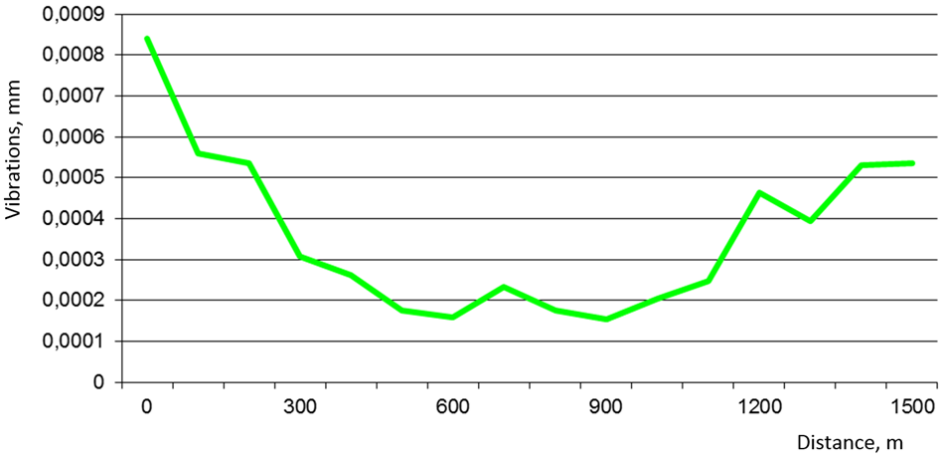

Fig. 2. Graph of vibration effective value depending on the distance from the turbine.

The tests are of exploratory nature, in order to increase the accuracy of the diagnosis it would be necessary to make measurements in subsequent time intervals. They indicate the need for further verification of soil vibration propagation in the wind power plant operation process.

The analysis of the obtained test results indicates that the wind power plant generates low frequency vibrations up to 1 Hz. In connection with the above fact, that the level of generated vibration signal is lower than 1 Hz, it should be concluded that it is not harmful to the human body and is safe for surrounding.

There is a need to verify the propagation of soil vibrations, because for points located on the same substrate this correlation is maintained and I indicate the damping of vibrations, while the change of soil and soil properties do not give such an unequivocal conclusion.

References

1. C. Cempel, *Diagnostyka Wibroakustyczna Maszyn*, 29.08.2011, http://www.wbc.poznan.pl/dlibra/docmetadata?id=8900&from=publication (1998)
2. W. M. Lewandowski, *Proekologiczne odnawialne źródła* (2010)
3. Z. Lubośny, *Farmy wiatrowe w systemie elektroenergetycznym*, (2009)
4. CIOP, http://www.ciop.pl/6538.html (2011)
5. S. Borowski, M. Szubartowski, L. Knopik, K. Migawa, MATEC Web of Conferences 182, 01015 (2018)
6. Fundamenty, http://polishwindenergy.com/index.php/pl/news/144-fundamenty-redukcja-kosztow-o-30-przy-zastosowaniu-technologii-ssf-i-spp (2011)
7. M. Karwowska, J. Mikołajczak, S. Borowski, Z. J. Dolatowski, J. Marć-Pieńkowska, W. Budziński, Ann. Anim. Sci., **14** (2014)
8. M. Karwowska, J. Mikołajczak, Z. J. Dolatowski, S. Borowski, Ann. Anim. Sci., **15** (2015)
9. V90, http://www.vestas.com/Files%2FFiler%2FPL%2FBrochures%2FV90_2_PL.pdf (2011)