Influence of the face surface shape of the piston on the limit value of compaction stress in the process of dry ice agglomeration

Jan Górecki[1,*], *Ireneusz* Malujda[1], *Dominik* Wilczyński[1], *Dominik* Wojtkowiak[1]
[1]Chair of Basic Machines Design, Poznan University of Technology, Piotrowo 3, Poznań, Poland

Abstract. This paper presents the results of research on improving the efficiency of the mechanical agglomeration through describing the influence of the shape of the piston pressure face on the limit force value. The focus of this study is the geometrical parameters which are describing the shape of the piston pressure face. Where these parameters influence on the value of the limit stress in the process of mechanical agglomeration of crystallized carbon dioxide. The first part of the paper proposes a model describing the influence of the geometric parameters of the piston pressure face on the value of axial force during the subsequent compression phase of the process. The research part of the paper presents the empirical research results to verify the proposed model. The results of the work will be used to determine the influence of the described geometrical parameters of the dry ice residue on the axial force value. The derived mathematical model will be used for defining the design requirements as the starting point for the design and building of dry ice compression and granulation machines.

Keyword: dry ice, compaction, densification, pressure face

1 Introduction

In modern economy, a very important part of the economical balance is the utilization of waste material created by the production processes. Such by-products often find many interested recipients [1]. Such materials can include crystallized carbon dioxide which is the waste product in the manufacturing of ammonia [2, 3]. The material is compressed and delivered to interested recipients in liquid form. As a result of sudden expansion of the liquid carbon dioxide, it crystallizes [4]. The end product of this

* Corresponding author: jan.gorecki@put.poznan.pl
Reviewers: *Darina* Ondrušová, *Wiesława* Piekarska

© The Authors, published by EDP Sciences. This is an open access article distributed under the terms of the Creative Commons Attribution License 4.0 (http://creativecommons.org/licenses/by/4.0/).

process is available in broken down form and exhibits peculiar properties due to its low temperature of approx. -78.5°C and the ability of sublimation in normal conditions [5-9]. The indicated properties make for a broad industrial application for such material, e.g. in refrigeration processes, when transporting thermolabile materials, disinfection and cleaning of surfaces [8-18].

The efficiency of refrigeration processes utilizing dry ice depends on sublimation time [2, 8, 11]. Therefore, the broken down material is agglomerated under elevated pressure which causes a decrease in the area of the phase transition, consequently increasing the indicated time of transition. Commercially available machines include equipment for agglomeration of dry ice. Literature research [19, 20] indicates that in most cases the piston-based method is utilized for this purpose. The method is carried out using special working units fitted with single-channel and multi-channel dies (Fig. 1). However, regardless of the type of die employed, the process remains the same from the standpoint of its general description. The agglomeration of dry ice is achieved as a result of displacement of the compacting piston (1) inside the compacting chamber (2). The process was divided into 3 sequentially recurring stages. During the first stage, the material is compacted until the moment in which the force applied to the piston F_T is balanced by the resistance force F_{OP}. In the subsequent step, the material is pressed through the channels forming the multi-channel die (4). After the piston achieves the boundary position, it is retracted to the initial position and the system is ready to begin another cycle. The change of force value on the piston as a function of its displacement was described in subject literature for an example multi-channel die [1, 11, 19,].

The employed technique is classified as one of the binder-free methods of agglomeration, characterized by a high degree of energy consumption [19, 21]. Therefore, it is recognized that works undertaken to determine the influence of the geometric parameters of the working system components of the machines employed to this end and their influence on the energy required to carry out the process are sound. Such assertion is justified in subject literature, which indicates that the yield stress value of the process is directly related to the geometrical parameters of the working system components [22, 23].

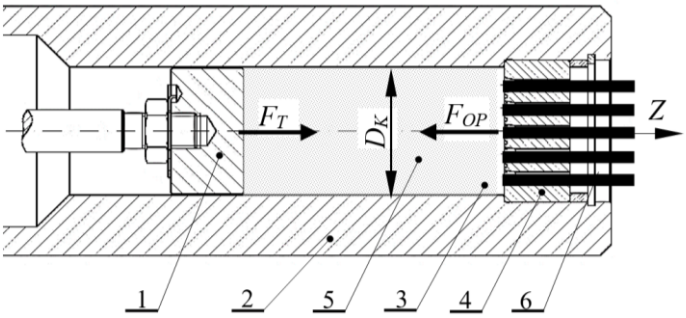

Fig. 1. Piston-type extrusion assembly 1 – piston, 2 – extrusion tube, 3 – multi-channel die, 4 – spacing ring, 5 – dry ice snow, 6 – compressed dry ice snow [1]

In available subject literature it was pointed out that the process characteristics of dry ice agglomeration is progressive (Fig. 2). Based on the above, it was determined that the agglomeration process is similar to mineral materials such as e.g. salt [19, 21, 24]. The information provided in available subject literature indicate that contribution

of tensile stress is omitted for the compaction process [5]. This served to simplify the formulated algebraic models by not accounting for friction between the agglomerated material and the pressure face surface of the piston. Additionally, one needs to consider the negligible factor of external friction, not exceeding 0.02 [19].

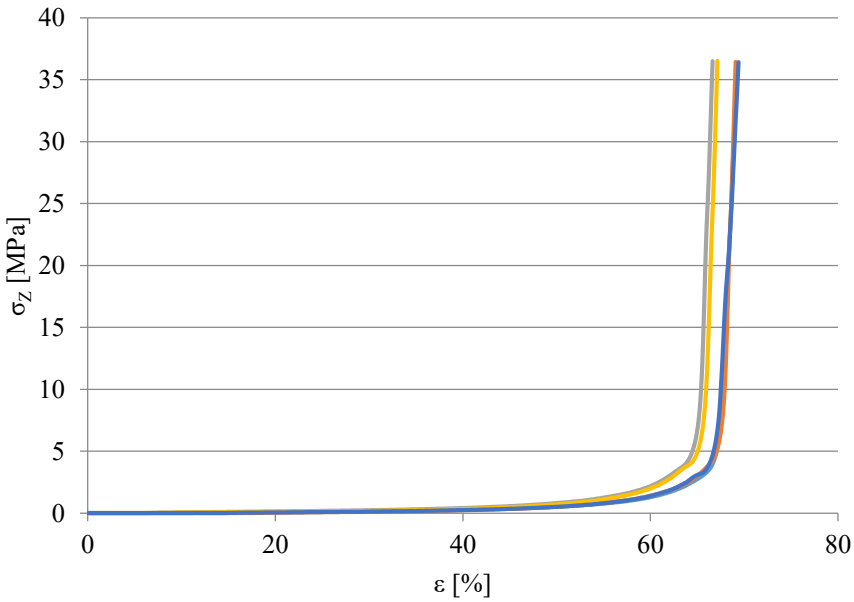

Fig. 2. Dry ice compaction characteristics in the working system with a cylindrical chamber [19, 24]

The present paper describes the results of study aiming to describe the characteristic of change in the value of yield stress of the agglomeration of crystallized carbon dioxide as a function of geometric parameters describing the shape of the pressure face of the compaction piston. This stems from the recognized connection between the value of compressing stress σ_Z and the surface area of the pressure face of the piston S_T, which, after taking into account the above described simplification, can be described as below.

$$\sigma_Z = \frac{F_T}{S_T} \tag{1}$$

Whereas the surface area of the pressure face of the piston S_T can be described in the cylindrical system using the following formula

$$S_T = \int_{\theta=2\pi}^{0} \int_{r=R_T}^{0} f(r)\, \mathrm{d}r\, \mathrm{d}\theta, \tag{2}$$

where *f(r)* stands for the two-side limited function describing the path curve of the surface S_T around the axis *z* (Fig. 3) of the piston. The limit of the path curve is related to piston diameter ($D_T = 2R_T$), which is approximately equal to the diameter of the compaction chamber D_K.

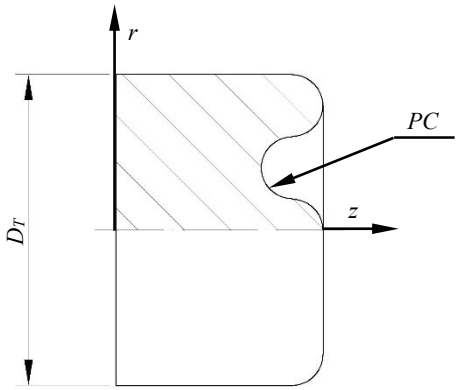

Fig. 3. Parameters of an example piston pressure face, D_T – piston diameter, *PC* – path curve

No information was found in available subject literature regarding the analysis of the influence of geometric parameters of the piston pressure face on the value of compaction yield stress σ_Z in the process of agglomeration of dry ice. However, based on the study of the available subject literature it was noticed that the geometric parameters of the indicated surface may affect the limit value of force F_T necessary to carry out the agglomeration process. The following chapters of this article present the results of empirical and numerical study carried out to formulate the relationship describing the change of force limit value F_T as a function of the surface area of the pressure face S_T.

During the review of the available literature, it was noticed that published results of FEM analysis of various processes are often verified or performed on the basis of empirical research [25-27]. In this paper has decided to use a similar approach to numerical analysis.

2 Methodology of Research

In order to determine the characteristics of change of the required force value on the piston F_T, as a function of the piston pressure face area S_T, a study was carried out according to the methodology described in subject literature [11, 19, 28, 29]. To this end, a durometer by MTS model Insight 50 kN was employed to register the force value and displacement of the measuring head with frequency 10 Hz.

To carry out the study, a special compaction head (Fig. 4) was used. In order to minimize the measuring error resulting from the possibility of off-center mounting of the compaction head, the durometer jaws were fitted with a jig to ensure the right-angle arrangement of the compacting force and the sample cross-section (5).

Before carrying out the test in the piston system (Fig. 5a), a special end with set shape of pressure face was mounted (Fig. 5b, 5c). In the case of piston end type 1, the pressure surface was flat and its area can be described with the following formula

$$S_T{}' = \frac{\pi {D_T}^2}{4} \tag{3}$$

Whereas for the piston end of the second type, the pressure face was spherical with height h = 5 mm and radius R_S = 25 mm. The indicated surface can be described with the following formula,

$$S_T'' = \pi\left(R_S{}^2 + h^2\right) \tag{4}$$

At the beginning of the study, the compaction chamber (Fig. 4 item 1) was filled with broken down dry ice with weight approx. 41.5 g. Next, the piston (3) was introduced into the compacting chamber (2). At the final stage, the head was fastened to the durometer jaws (6). After taring the machine, the experiment was carried out in which the piston system (3) was moved downwards at a constant velocity of 5 mm/s. After the force F_T has reached the equal value to the force of resistance depending on the utilized multi-channel die, (4), the material was pressed through its forming dies.

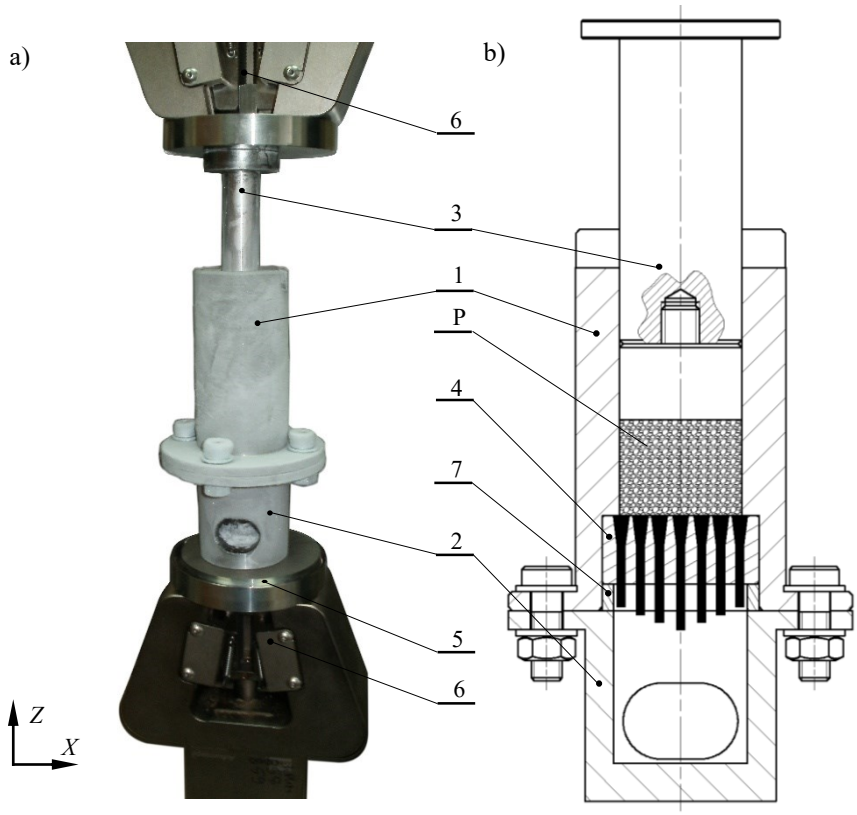

Fig. 4. Measuring unit a) MTS machine jaws with measuring head and alignment system, b) cross section of the measuring head: 1 – cylindrical sleeve, 2 – head base, 3 – piston, 4 – multi-channel die, 5 – right angle jig, 6 – durometer jaws, 7 – spacing sleeve, P – agglomerate

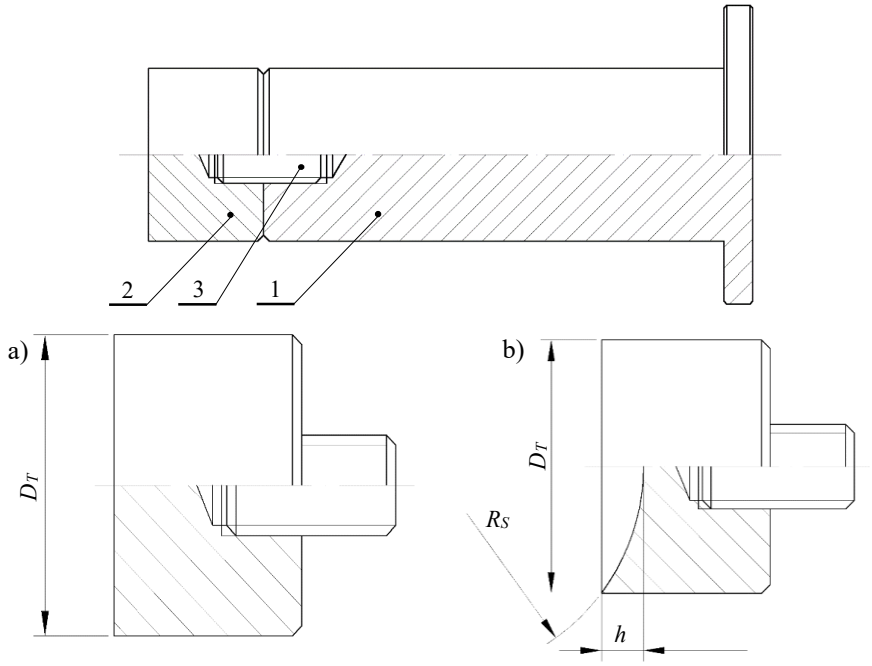

Fig. 5. Piston unit with replaceable end a) piston end type 1– with flat pressure face, b) piston end type 2 – with concave pressure face: 1 – body, 2 – replaceable end, 3 – fixing screw, R_S – sphere radius, h – sphere height

The examination was carried out in 10 repetitions, the results were averaged and presented as the compaction characteristics describing the change in force at piston F_T as a function of relative strain of the agglomerated material along axis Z (Fig. 6).

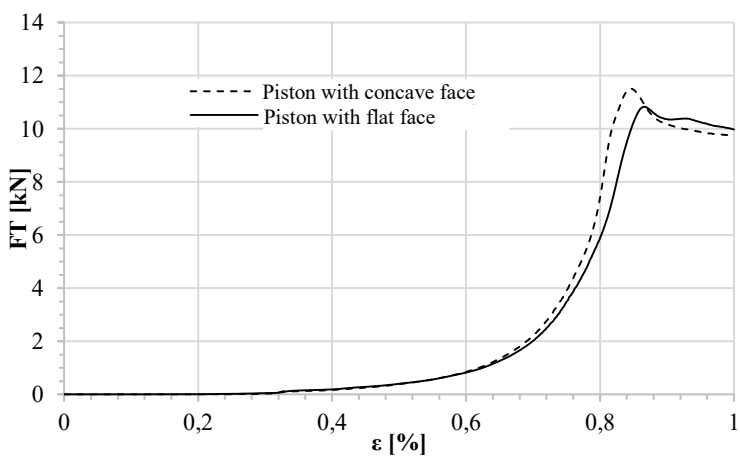

Fig. 6. Characteristic of force change at the piston as a function of relative displacement of the piston

Additionally, during testing, measurement was taken for the weight of the tested material before m_0 and after m_1 the examination. Results are presented in Table 1.

Table 1. Weight of tested material before and after the examination.

	Flat compaction piston			**Concave compaction piston**		
No.	m_0 **[g]**	m_1 **[g]**	Δm **[g]**	m_0 **[g]**	m_1 **[g]**	Δm **[g]**
1	40.5	22.8	17.7	42.6	24.5	18.1
2	40.7	23.9	16.8	40.1	20.8	19.3
3	40.4	20.8	19.6	40.8	20	20.8
4	41.4	19.7	21.7	40	20.7	19.3
5	40.8	19.9	20.9	43	24.4	18.6
6	41.3	21.5	19.8	42.1	24.2	17.9
7	42.2	22	20.2	41.2	21.8	19.4
8	40.8	19.7	21.1	43.5	23.8	19.7
9	43.5	19.5	24	40.6	19.8	20.8
10	44.3	23.6	20.7	41	21.3	19.7
$\overline{m_i}$	**41.59**	**21.34**	**20.25**	**41.49**	**22.13**	**19.36**
δ	1.338698	1.679418	2.015082	1.232387	1.897981	0.982288

The determined average value of compacting stress σ_Z for compacting the material using piston with pressure face type 1 is 11.83 MPa. Whereas for face type 2 it was 11.16 MPa.

3 FEM Analysis

Different shapes of the piston face do not exhibit a considerable difference in the compaction force necessary to carry out the compaction process. However, they might unequivocally affect the density distribution of the compacted material, in particular in the immediate vicinity of the piston pressure face. In order to examine this phenomenon, the process of compacting of crystallized carbon dioxide was modeled in the Abaqus software. The compacted material was modeled using Drucker-Prager/Cap solution with the following parameters: flexural modulus – 3.2 GPa, Poisson's coefficient – 0.46, cohesion coefficient – 3.4 MPa, Drucker-Prager friction angle – 24°, α = 0.01. Fig. 7 presents the graph of the change of plastic strain p_b as a function on volumetric plastic strain ε_{pl}. The details regarding the employed parameters in the material model can be found in paper [20].

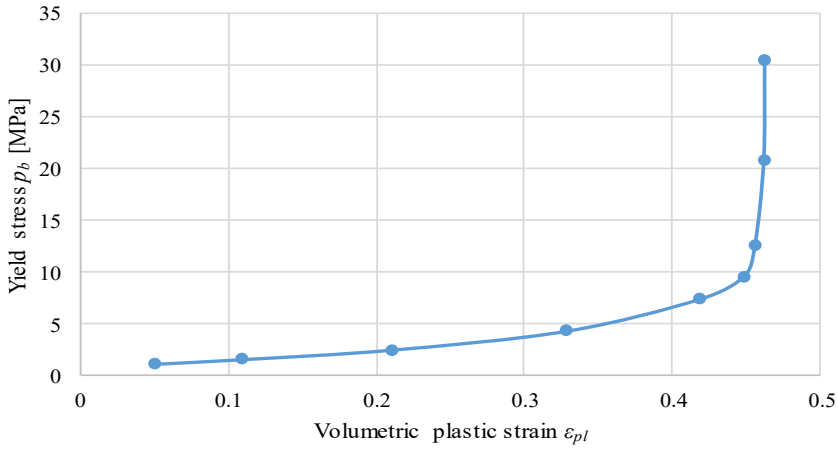

Fig. 7. The change in value of plastic strain p_b as a function of volumetric plastic strain ε_{pl}

The MES analysis was carried out for four shapes of piston pressure face: flat, concave, dual-sin concave and quadro-sin concave. Their external diameter D_T was equal to 36 mm. Fig. 8 shows the construction drawings of the pistons with examined shapes. Whereas Fig. 9 presents the results of the MES analysis which was to determine the distribution of density of the material during its compaction.

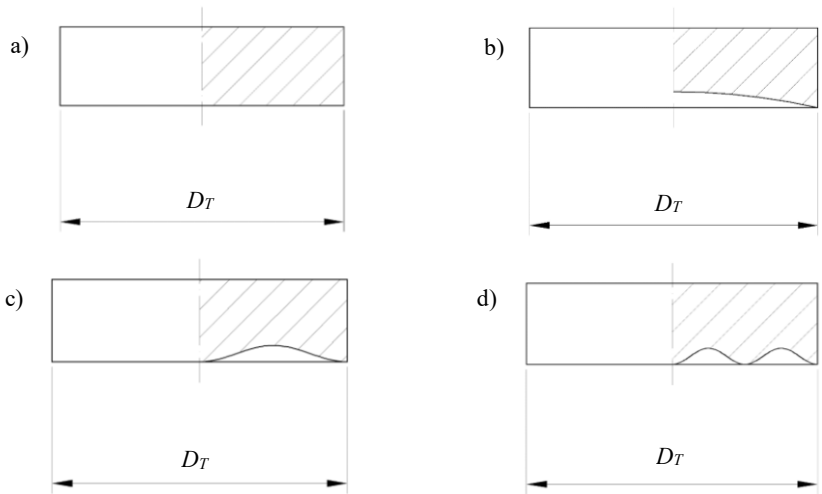

Fig. 8. Construction drawings of pistons with examined shape types, a – piston with flat pressure face, b – piston with concave pressure face, c – piston with dual-sin concave pressure face, d – piston with quadio-sin concave pressure face

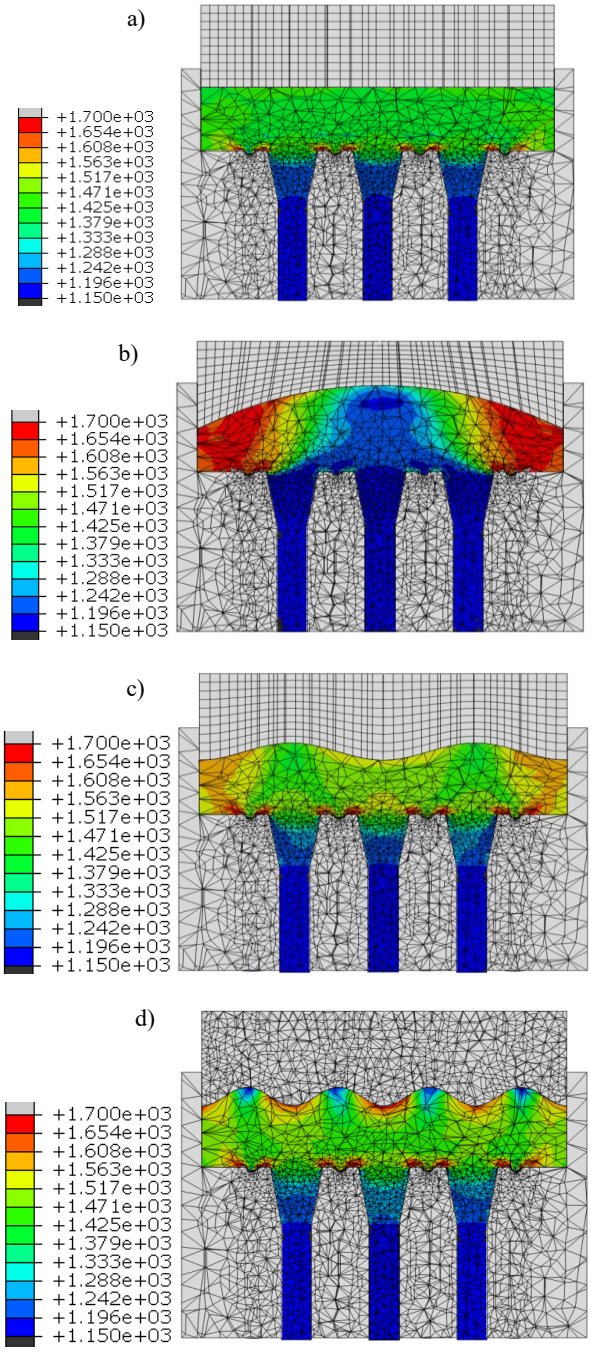

Fig. 9. Density distribution in compacted material, a – piston with flat pressure face, b – piston with concave pressure face, c – piston with dual-sin concave pressure face, d – piston with quadio-sin concave pressure face

4 Conclusions

The results of the carried out empirical and analytical studies allow to formulate the following conclusions:

1. No dependency between the piston pressure face area and the value of force on the piston wad determined. The force value is associated with the boundary value of compacting stress.
2. Numerical analyses indicate a relationship between the distribution of density of the agglomerated deposit in the compaction chamber and the shape of the compaction piston pressure face.
3. Numerical analyses indicate, that the distribution of density of the agglomerated deposit in the course of the compaction process using the examined shapes of the piston pressure surface is the most even when the process is carried out with flat shaped piston face.
4. Regarding the agglomeration process of dry ice utilizing multi-channel dies, the material is subsequently compacted in the convergent section of the channels. Therefore, the shape of examined compaction piston face does not directly affect the final density of agglomerated dry ice.

The performed examinations allow to suspect that the varied shape of the compaction piston may be relevant for the agglomeration process of dry ice utilizing single-channel dies. The conducted program of the study did not include the process of compaction utilizing such dies, therefore no results for the indicated case were presented in this paper.

References

1. J. Górecki, I. Malujda, K. Talaśka, D. Wojtkowiak, *Dry ice compaction in piston extrusion process,* Acta mechanica et automatica **11,** 4, 313-316 (2017)
2. L. Chen, X. Zhang, *A review study of solid-gas sublimation flow refrigeration: Form basic mechanism to applications*, International Journal of Refrigeration, **40**, 61-83, (2014)
3. J. Vansant**,** *Carbon dioxide emission and merchant market in the European union*. In Aresta M. (eds) *Carbon Dioxide Recovery and Utilization*, Springer Science & Business Media. (2013)
4. Y. Liu, H. Maruyama, S. Matsusaka, *Agglomeration process of dry ice particles produced by expanding liquid carbon dioxide*, Advanced Powder Technology, **21**, 652-657 (2010)
5. J. Górecki, I. Malujda, K. Talaśka, M. Kukla, P. Tarkowski, *Static compression tests of concentrated crystallized carbon dioxide*, Applied Mechanics and Materials, **816**, 490-495 (2015)
6. J. Górecki, I. Malujda, K. Talaśka, D. Wilczyński, D. Wojtkowiak, *Influence of geometrical parameters of convergent sleeve on the value of limit stress,* MATEC Web of Conferences **157**: 05006 (2018)
7. Y. Liu, G. Calvert, C. Hare, M. Ghadiri, S. Matusaka, *Size measurement of dry ice particles produced form liquid carbon dioxide*, Journal of Aerosol Science, **48**, 1-9 (2012)

8. V. Masa, P. Kuba, *Efficient use of compressed air for dry ice blasting*, Journal of Cleaner Production, **111**, 76-84 (2016)
9. A. Mazzoldi, T. Hill, J. Colls, *CO_2 transportation for carbon capture and storage: Sublimation of carbon dioxide from a dry ice bank*, International Journal of Greenhouse Gas Control, **2**, 210-218 (2008).
10. S. Dong, B. Song, B. Hansz, et al., *Modeling of dry ice blasting and its application in thermal spray,* Material Research Innovations, **16**, 61-66 (2012)
11. J. Górecki, I. Malujda, K. Talaśka, *Influence of the Value of Limit densification Stress on the Quality of Pellets During the Agglomeration Process of CO2*, Procedia Engineering, **136**, 269-274 (2016)
12. M. Li, W. Liu, X. Qing, et al., *Feasibility study of a new approach to removal of paint coatings in remanufacturing*, Journal of Materials Processing Technology, **234**, 102-112 (2016)
13. Y. Liu, D Hirama D., Matusaka S., *Particle removal process during application of impinging dry ice jet*, Powder Technology, **2017**, 607-613, 2012.
14. C. Otto, S. Zahn, F. Rost, et al., *Physical Methods of cleaning And Disinfection of Surfaces,* Food Engineering Review, **3**, 171-188 (2011)
15. G. Spur, E. Uhlmann, F. Elbing, *Dry-ice blasting for cleaning: process, optimization and application*, Wear, **233–235**, 402–411 (1999)
16. E. Uhlmann, M. Kretzschmar, F. Elbing, V Mihotovic**,** *Deburring with CO_2 Snow Blasting*. In: J. Aurich, D. Dornfeld (eds) *Burrs - Analysis, Control and Removal*. Springer, Berlin, Heidelberg.
17. A. Witte, M. Bobal, R. David, et al.,), *Investigation of the potential of dry ice blasting for cleaning and disinfection in the food production environment,* LWT - Food Science and Technology, **75**, 735-741 (2017).
18. H. Yamaguchi, X. Niu, K. Sekimoto, P. Neksa, *Investigation of dry ice blockage in an ultra-low temperature cascade refrigeration system using CO_2 as a working fluid*, International Journal of refrigeration, **34**, 466-475, (2011).
19. J. Górecki, Doctoral Thesis: *Shaping of the geometrical parameters of the working assembly of the CO2 agglomeration machine using the modeling of the limit stress (in polish)*, Poznan University of Technology, (2017)
20. K. Talaśka, *Study of research and modelling of compaction processes of powder and shredded materials,* Poznan University of Technology (2018)
21. Z. Drzymała**,** *Basics of Compaction Engineering of Material Compaction* (*in polish*)**,** PWN, (1988)
22. I. Malujda, *Modeling of limit stress fields and temperature in plasticizing and compaction processes oriented to the needs of machine design (in polish),* Poznan University of Technology, (2012)
23. J. Piwnik, *Theory of the experiment in the analysis of extrusion processes (in polish)*, Bialystock University of Technology, (2010)
24. J. Górecki, I. Malujda, K. Talaśka, M. Kukla, P. Tarkowski**,** *Investigation of internal friction of agglomerated dry ice*, Procedia Engineering **136**, 275-279 (2016)

25. V. Baniari, M. Blatnicka. M. Sajgalik, et al., *Measurement and numerical analyses of residual stress distribution near weld joint*, Procedia Engineering **192**, 22-27 (2017)
26. T. Domański, A. Sapietova, M. Saga, *Application of Abaqus Software for the Modeling of Surface Progressive Hardening,* Procedia Engineering **177**, 64-69 (2017)
27. W. Piekarska, D. Goszczyńska-Króliszewska, Z. Saternus, et al. *Numerical analysis of laser welding with consideration analytical methods of determining phase transformations and mechanical properties of welded joint*, MATEC Web of Conferences, **157**: 02039 (2018)
28. J. Górecki, I. Malujda, K. Talaśka, M. Kukla, P. Tarkowski, *Influence of the Compression Length on the Ultimate Stress in the Process of Mechanical Agglomeration of Dry Ice,* Procedia Engineering **177,** 363-368 (2017)
29. J. Górecki, I. Malujda, K. Talaśka, D. Wilczyński, D. Wojtkowiak, *Influence of geometrical parameters of convergent sleeve on the value of limit stress,* MATEC Web of Conferences **157**: 05006 (2018)