Application of Adaptive PSO and Adaptive Fuzzy Logic Controllers to Speed Control PMSM Motor Servo Systems

Le Dinh Hieu[1,2], Temkin Igor Olegovich [1]

[1] *Information Technologies - Automated Control Systems, National University of Science and Technology MISiS, Leninsky Prospekt 4, 119049, Moscow, Russia.*
[2] *Electrical-Electronics Faculty, Hue Industrial College, Hue City, 70 Nguyen Hue Street, 530000, Vietnam.*

Abstract. Three phases Permanent Magnet Synchronous Motors (PMSM) are non-linear resistors, resistance of stator winding, air gap flux, cross-coupling, saturation variable times and cogging torque in operation. Due to the nonlinear nature of PMSM, it is a challenge to control exactly the speed, torque and position. This paper presents two methods for speed control stabilization of the PMSM using the Adaptive Fuzzy Logic - Proportional Integral Derivative controller (AFL-PID) and Adaptive Particle Swarm Optimization - Proportional Integral Derivative controller (APSO-PID). The response results of the speed control PMSM Servo Systems use AFLC-PID and APSO-PID methods are compared and the conclusions are given.

1 Introduction

The Permanent magnet synchronous motors (PMSM) advantages high power factor, high efficiency [1] and large starting torque that it has been widely used in electric vehicles and industrial applications [2]. However, PMSM disadvantages are non-linear objects, strong coupling, increasing the difficulty of control. Recent years, there are many researchers to improving ensure the static and dynamic performance of this servo systems motor driver.

Proportional + Integral + Derivative (PID) controllers are widely used in industrial applications to provide optimal and robust performance for stable, unstable, and nonlinear processes [3]. In addition, the dynamic performance of the PMSM, especially the response speed, but optimal PID controller is limited by the fixed PID controller parameters [4]. The fuzzy control method complementarily has strong robustness and can shorten the response time of system [4]. Therefore, Adaptive Fuzzy Logic Controller - PID is applied to speed control systems of PMSM.

The design process of an AFL-PID controller relies on expert experience. The AFL-PID controller is non-linear and it is scarcely possible to establish accurate mathematical model. So it gets hard to analysis the stability of the system with an AFL-PID controllers [5]. But still there are several ways for solving the problem, such as Lyapunov stability theory and circle stability criterion method, etc...

PSO algorithm is appropriate for parameter optimization in continuous search space in many dimensions. This method is intended to produce high quality of the solution by shorter time [6].

The drawbacks of these approaches are that they are obscure to understand or complicated implement. The main objectives of this paper are to design an improved AFL-PID and APSO-PID controllers for speed regulation of a PMSM and to validate the controller by simulation. Besides, a novel but simple way to analyse the stability of a system based on both AFL-PID and APSO-PID controllers is proposed and it is used for the PMSM control system.

In this paper, the first it is introduced in Section I. Then, Section II based on the mathematic model of PMSM. After, that the APSO-PID and AFL-PID speed controllers for PMSM motor are develop in Section III and Section IV. Next section V presents simulations compare two methods for speed control of PMSM servo systems driver. Finally, Section VI presented the conclusions of the paper.

2 Model mathematic of PMSM motor

The PMSM has ability to operate in both motor mode and generation mode depending upon the sign of the mechanical torque. Positive for motor and negative for generator. A second order state space model is used to represent the electrical and mechanical parts of the machine. The model of PMSM has been developed on rotor reference frame using the following assumptions:

- Neglecting the saturation.
- Assuming the induced EMF is sinusoidal in nature
- Eddy currents and hysteresis losses are negligible
- Field current dynamics are not present.

© The Authors, published by EDP Sciences. This is an open access article distributed under the terms of the Creative Commons Attribution License 4.0 (http://creativecommons.org/licenses/by/4.0/).

The equations of PMSM are given [7]:

$$\begin{aligned} u_d &= Ri_d + \frac{d\lambda_d}{dt} - \omega_e \lambda_q \\ u_q &= Ri_q + \frac{d\lambda_q}{dt} - \omega_e \lambda_d \\ J\frac{d\omega_m}{dt} &= T_m - T_L - B\omega_m \\ T_m &= \frac{3}{2} p(\lambda_d i_q - \lambda_q i_d) \end{aligned} \tag{1}$$

where: $\lambda_d = L_d i_d + \psi_d$ and $\lambda_q = L_q i_q + \psi_q$ are the total flux linkages along the d and q axes, respectively, ψ_d and ψ_q are the PM flux linkages along the d and q axes, respectively, and ω_e is the electrical angular speed. Further, u_d and u_q are the stator voltages along the d and q axes, respectively, i_d and i_q are the stator currents along the d and q axes, respectively, R is the stator resistance, L_d and L_q are the stator inductances along the d and q axes, respectively. It has been further assumed that, since the surface mounted PMSM is non-salient, L_d and L_q are equal $L_d = L_q$.

where ω_m is the mechanical angular speed, J is the inertia, T_m is the electromagnetic torque, T_L is the load torque and B is the friction coefficient. p is the number of pole pairs.

3 Adaptive PSO-PID speed controller PMSM

3.1 PSO optimal the parameters PID

PSO algorithm is based upon animal social systems such as birds flocking or fish schooling which is commonly used as an optimization technique. There are several particles donating a set of optimization particles which search for the best solution in a multi-dimensional search space. This algorithm finds the best optimized value for each particle by convergence [8]. The optimized value is estimated using some cost function which defines the best value for that fitness function. Each particle has two main parameters: the first is particle position x_i and the second is particle velocity v_i where i denotes the iteration index. Afterwards the best values, attained from all the particles, combine to get the best value for the whole swarm. For a swarm of N particles traversing a D-dimensional space. After finding the two best values: best known velocity and best known positions, the particles update their velocity and positions based on the following equations [9, 10]:

$$v_t^{t+1} = \chi . v_t^{t+1} + C.\mathrm{r}_1^t(\mathrm{p}_t^t - x_t^t) + C_2.\mathrm{r}_2^{t+1}(\mathrm{g}_t^t - x_t^t) \tag{2}$$

$$x_t^{t+1} = x_t^t + v_t^{t+1} \tag{3}$$

Where: χ is a parameter called inertia weight, the parameters C_1 and C_2 are called acceleration coefficients, and r_1^t and r_2^t are two $n \times n$ diagonal matrices in which the entries are random numbers uniformly distributed in the interval [0,1]. At each iteration, these matrices are regenerated. p_1^t and g_1^t are the personal best solution of the $i-th$ particle and the global best solution ever found by any particle in the swarm, respectively.

Generally, the value of inertia weight is linearly decreased over the generations to favor exploration in initial generations and exploitation in the later generations. The following equation is used to update the value of inertia weight.

$$\chi = \chi_{\max} - \frac{\chi_{\max} - \chi_{\min}}{iter_{\max}} \times iter \tag{4}$$

where $\chi_{\max}$ and $\chi_{\min}$ are respectively the lower and upper boundaries of the inertia weight χ. The argument $iter_{\max}$ is the maximum number of iteration and the variable $iter$ is the current iteration.

3.2 Adaptive PSO-PID speed controller

This paper proposes the improved Particle Swarm Optimization (PSO) by a careful combination of the original PSO algorithm and the response characteristics. More specifically, the improvements mainly concern three aspects: the first is the constitution of solution components, the second parameter setting based on prior, and the third is evaluation function definition.

Firstly, three controller parameters are defined to compose an individual $\vec{x}_j = f(k_p, k_i, k_d)$, therefore, there are only three members in an individual. Each member is assigned as a real value. If there are n individuals in a population, then a population X can be expressed as the following matrix form.

$$X = \begin{bmatrix} \vec{x}_1 \\ \vec{x}_2 \\ \vdots \\ \vec{x}_n \end{bmatrix} = \begin{bmatrix} k_{p1} & k_{i1} & k_{d1} \\ k_{p2} & k_{i2} & k_{d2} \\ \vdots & \vdots & \vdots \\ k_{pn} & k_{in} & k_{dn} \end{bmatrix} \tag{5}$$

where the $\vec{x}_j$ is a vector, j = 1, 2, · · ·, n.

Secondly, some parameter settings are associated with the prior knowledge extracted: The proportional gain K_p can be used for decreasing the rise time and the derivative gain K_d can regulate the overshoot and settling time and the integral gain K_i contributes to eliminating the steady-state error. The key parameter χ in (2) is extended from a scalar to a vector, expressed as $\vec{\chi} = (\chi_p, \chi_i, \chi_d)$. The element χ_p is fined as a nonlinear piece-wise function:

$$\vec{\chi}_p = \begin{cases} \chi_{\max}, if\,|\delta - 1| \geq \sigma or [e_{ss}] \geq \tau \\ \frac{1}{\lambda^2}\left[(\chi_{\max} - \chi_{\min})(\delta - 1)^2 + \chi_{\min}\right] \end{cases} \quad (6)$$

where λ and τ are thresholds of overshoot and steady-state error, respectively. According to general definitions, λ can be defined as 0.25 and τ is 0.01.

The inertia weight χ_p according to the overshoot and steady-state error, where the τ = 0.01 and λ = 0.25.

The argument χ_p increases non-linearly with $(\delta - 1)$ in the interval [-0.3, 0.3].

The position update equation (3) is made to minor modifier to meet the requirements of the special cases.

$$x_{j,p}^{t+1} = \begin{cases} x_{j,p}^{t+1} - \left|v_{j,p}^{t+1}\right|, e_{ss} \geq 0.1 \\ x_{j,p}^{t+1} + \left|v_{j,p}^{t+1}\right|, e_{ss} \leq -0.1 \end{cases} \quad (7)$$

Where: $x_{j,p}^{t+1} = k_{j,p}^{t+1}, j = 1,2,3,...,n$. The superscript t is indicated the variable $iter$.

Thirdly, a more comprehensive performance index is designed not only based on integral error, but also based on the control input, rise time, settling time, etc…

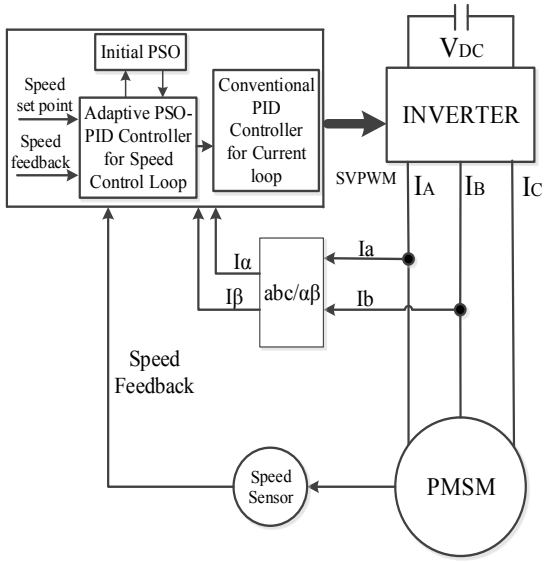

Figure 1. Block diagram of an Adaptive PSO-PID controller.

Design of PID Controller:

$K_i \in [0, 50]$ in the automatic voltage regulator. The other parameter and strategies involved in these algorithms are listed as follows.

For the Improved PSO algorithm optimal K_p, K_i, K_d:

- Size of the swarms: N = 22 individuals.
- Inertia weight χ decreasing linearly over the iterations.
  χ_{max} = 1.25 and χ_{min} = 0.02.
- Acceleration coefficients C_1 = 1.29; C_2 = 0.9.
- Maximum velocity $v_{max} = (x_{max} - x_{min})/5$.

Table 1. Parameters of PMSM.

PMSM Parameters		
Components	Symbol	Value
Rated Torque	T_N	30 N.m
Flux Linkage	ψ_f	0.175 Wb
Phase Resistance	R	2.875 Ω
q-axis Inductance	L_q	0.0150 H
d-axis Inductance	L_d	0.0152 H

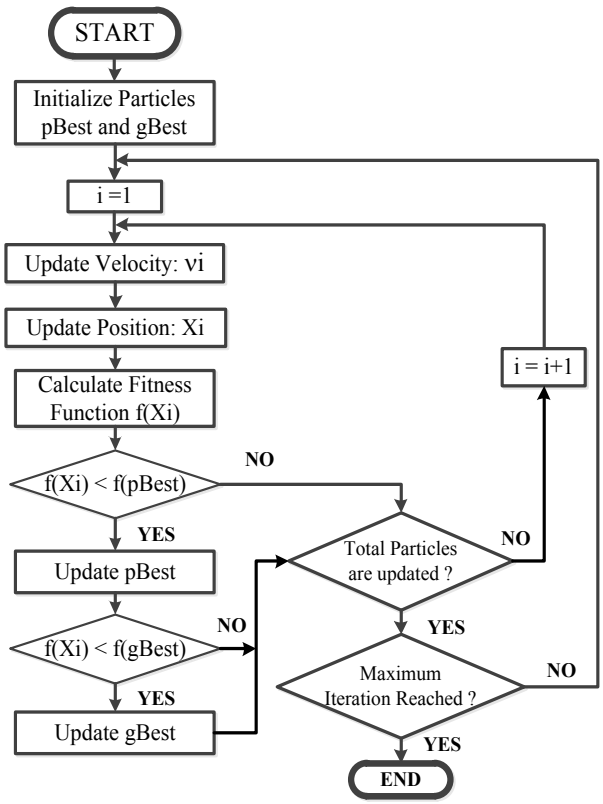

Figure 2. The Folowchart of the PSO Algorithm optimal Parameters PID.

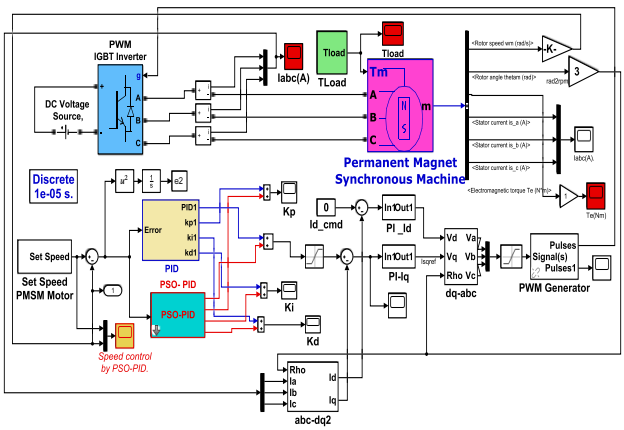

Figure 3. Simulation PMSM use APSO-PID speed control by software Matlab/Simulink R2016.

4 Adaptive fuzzy-PID speed controller PMSM

The block diagram of PMSM speed control system based on an AFL-PID controller is shown in Figure.4. The controller for speed regulation is an AFL-PID controller cascade whose parameters change with the system status, so it can improve the dynamic performance. It contains a conventional PID and a Fuzzy Logic inference system. The design work includes the following aspects:

1) The initial parameters K_p, K_i and K_d of conventional PID;
2) Membership functions of fuzzy inference system;
3) Fuzzy control rules;
4) The input scaling factors E, Ec.

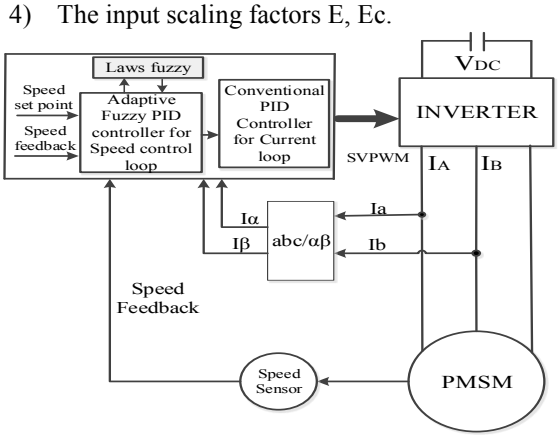

Figure 4. PMSM speed control system based on adaptive fuzzy PID.

4.1. Design K_p, K_i, K_d of an AFC-PID controller

In addition to the experimental method, the initial parameters of conventional PID can be calculated by the process in literature [11, 12]. Practically, the results can be directly applied to the control system if a conventional PID is adopted, but they are just initial value for the fuzzy PID. In this paper, the information about PMSM is shown in Table I, $K_p = 79.0$, $K_i = 3.0$, $K_d = 0.0014$.

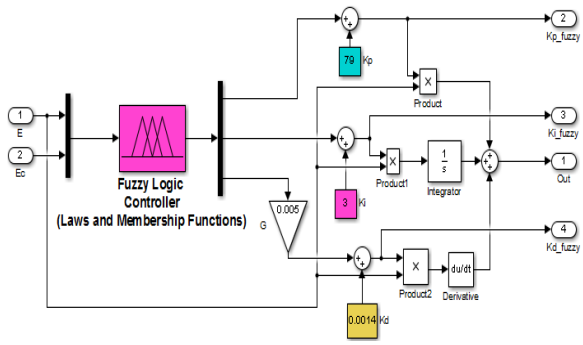

Figure 5. Simulation an AFLC-PID controller cascade structure by Sofware Matlab/Simulink R2016.

4.2 Design of membership functions

The membership functions of Mamdani Fuzzy controller for input map the normalized speed error (E) and error change rate (E_C) to the membership degree [-3,3], while the membership functions for output play an opposite role. There are seven linguistic variables, namely Positive Large (PL), Positive Medium (PM), Positive Small (PS), Zero (ZO), Negative Small (NS), Negative Medium (NM), Negative Large (NL).

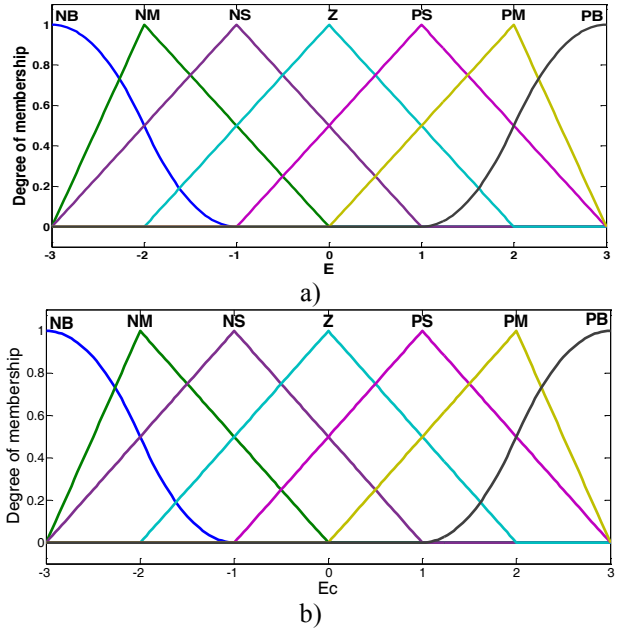

Figure 6. Membership functions for inputs: a) E and b) E_C. NB (Negative Big); NM (Negative Midium); NS (Negative Small); Zero; PS (Positive Small); PM (Positive Midium); PB (Positive Big).

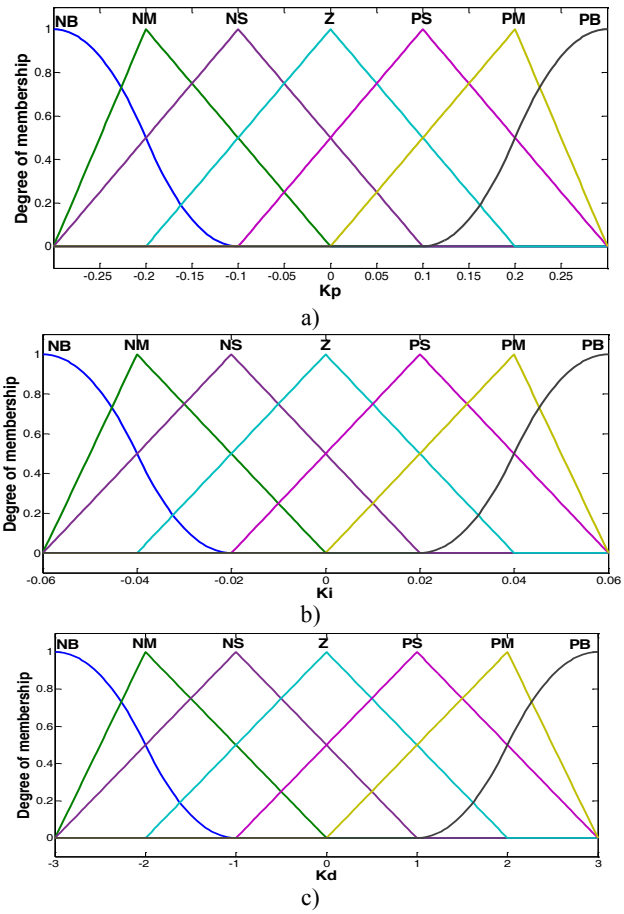

Figure 7. Membership functions of outputs: a) K_p; b) K_i, c) K_d.

The input and output membership functions designed in this paper are depicted in Figure.6 and Figure.7, respectively. They are composed of triangular and sigmoidal membership functions.

The input membership functions are characterized by that the fuzzy controller becomes less sensitive when the input value is relatively small. In other words, when the speed motor is close to the reference value, the conventional PID parameters remain stable, so that the fluctuation of limited motor speed and the steady-state performance is ensured.

As for the output membership functions, when E and E_c keep small, the initial correction value (K_p, K_i, K_d) changes. Compared with the membership functions adopted in [6], the ones proposed focus on not only the dynamic performance but also the steady-state performance of the system.

4.3 Design of fuzzy control rules

Fuzzy control rules, the link between inputs and outputs, which depend on the fundamental knowledge and expert experience are undoubtedly important to a fuzzy controller.

Only by making reasonable fuzzy control rules can good.

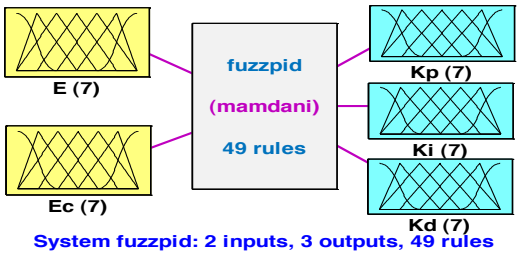

Figure 8. Surface K_p, K_i, K_d for Output.

E = [-3;3]; E_c = [-3;3]; K_p = [-0.3; 0.3]; K_i = [-0.06; 0.06]; K_d = [-3; 3]; The number laws are 49 laws (7x7 = 49 laws).

Performance of the system be guaranteed. According to a large number of experimental results, the fuzzy control rules suited to the system are shown in Table II. As is shown in Table II: K_p, K_i and K_d share the same rules, where K_p, K_i and K_d are proportionality coefficient, integral coefficient and differential coefficient, respectively.

Table 2. Fuzzy control rules for K_p, K_i and K_d .

E / Ec	NB	NM	NS	Z	PS	PM	PB
NB	NB	NB	NM	NM	NS	ZO	ZO
NM	NB	NB	NM	NM	NS	ZO	PS
NS	NM	NM	NS	NS	ZO	PS	PM
Z	NM	NM	NS	ZO	PS	PM	PB
PS	NS	NS	ZO	PS	PM	PM	PB
PM	NS	ZO	PS	PS	PM	PM	PB
PB	ZO	ZO	PM	PM	PB	PB	PB

4.4 Design of output scale factors

E and E_c into the fuzzy are domain ranging [-3,3] in Figure 6. The final correction value K_p^*, K_i^* and K_d^*. In this case, Figure.5 shows illustrative K_p^*=1, K_i^* = 1 and K_d^* = 0.005.

4.5 AFL-PID controller speed PMSM Motor

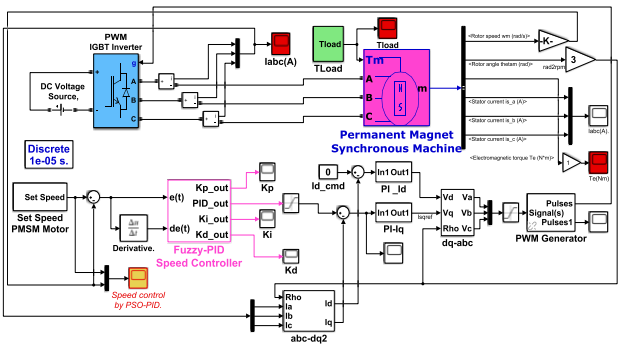

Figure 9. Simulation PMSM motor use AFL-PID speed controller by Sofware Matlab/Simulink R2016.

5 Simulation results

The compared adaptive controller by AFL-PID and APSO-PID speed rotor controller are always in the working process of the PMSM servo systems from results Simulation. From "*Fig.10*" to "*Fig.22*" and Table III show compared between the AFL-PID and APSO-PID speed controllers. And the results simulation given quality of speed control PMSM servo systems when they were start-up, charge load and discharge load.

The "*Fig.10*" shows the simulation result of proposed AFL-PID and APSO-PID and PID controllers to speed control of PMSM servo systems. The figure shows the desired speed (ω_m) (set point speed) and the respond speed motor of PID and AFL-PID and APSO-PID controllers in overall: start-up, step increate speed, step discreate speed, charge load, discharge load and reverse rotation motor. The evaluations are given in Table III by the numbers and images in "*Fig.11*" to "*Fig.22*"

The error speeds of PID and AFL-PID and APSO-PID controllers in "*Fig.11*" illustrated the APSO-PID controller smaller than AFL-PID, PID controller and AFL-PID smaller than PID controller. And the "*Fig.12*" shows operator of change and dischange of Torque Load on Rotor PMSM systems Driver from 0 to 30(N.m) to test speed rotor Systems diver.

The I_a, I_b and I_c currents stator of PMSM in operated change/dischange Load and increase/descreate speed control servo systems drive when they used PID, AFL-PID and APSO-PID controllers show in the "*Fig.14*" to "*Fig.16*". The frequencys and amplitudes, phase angles of I_a, I_b and I_c always change with a values difference in testing systems.

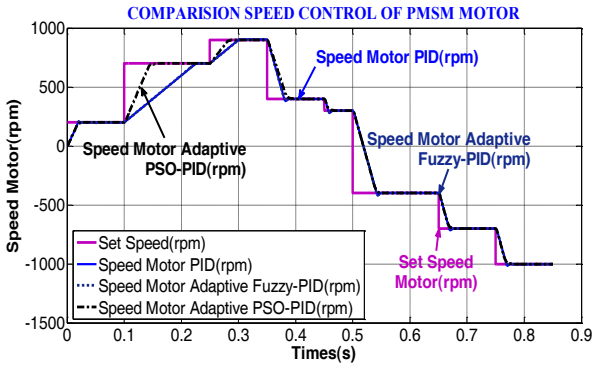

Figure 10. Speed control PMSM servo system use PID, AFL-PID and AFL-PID controllers.

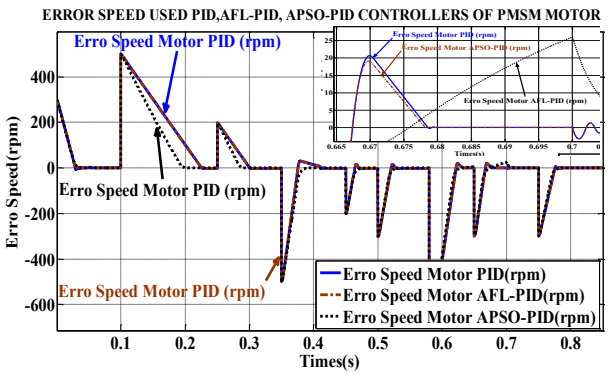

Figure 11. Error speed control PMSM servo system use PID, AFL-PID and AFL-PID controller.

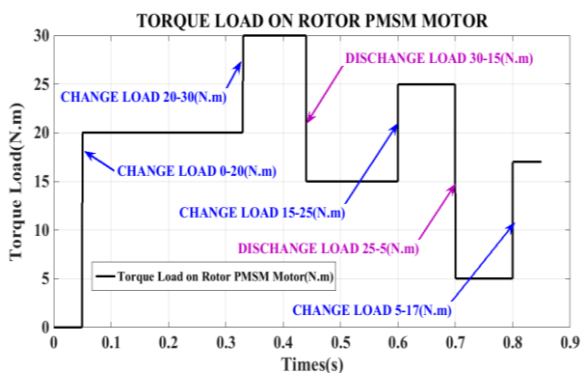

Figure 12. Change and dischange of Torque Load on Rotor PMSM systems Driver.

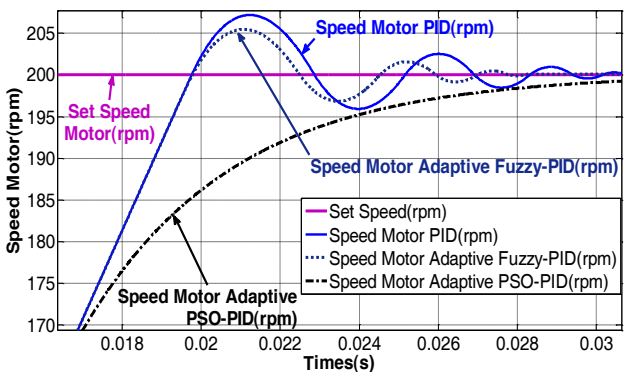

Figure 13. Comparision start-up PMSM 0-200(rpm) use PID, AFL-PID and APSO-PID controllers.

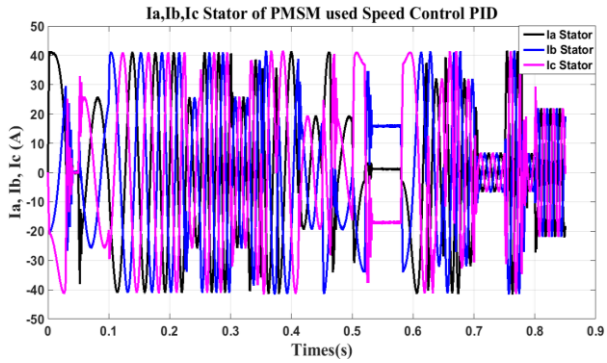

Figure 14. I_a, I_b, I_c stator of PMSM use speed control PID.

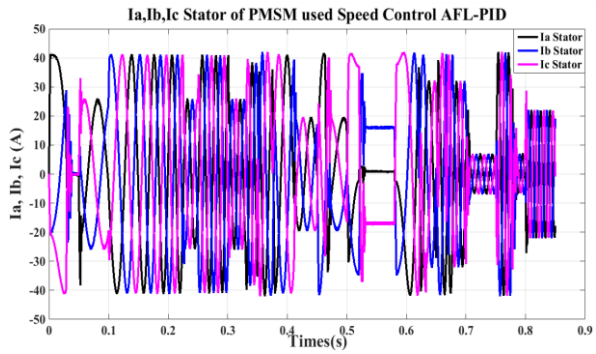

Figure 15. I_a, I_b, I_c stator of PMSM use speed control AFL-PID.

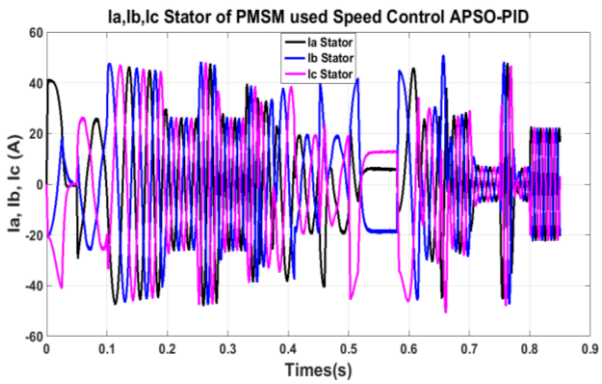

Figure 16. I_a, I_b, I_c stator of PMSM use speed control APSO-PID.

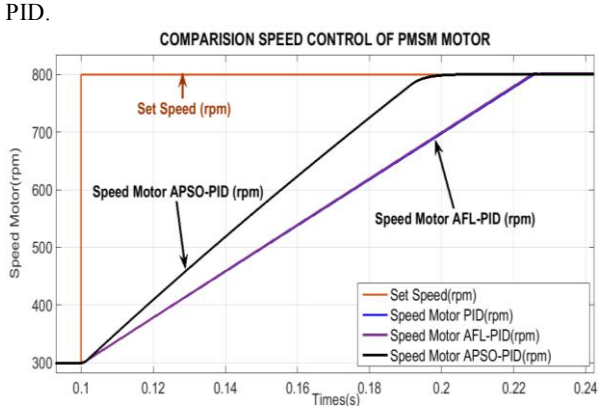

Figure 17. Compare speed control PMSM between PID and AFL-PID and APSO-PID controllers inscreate speed 300-800(rpm).

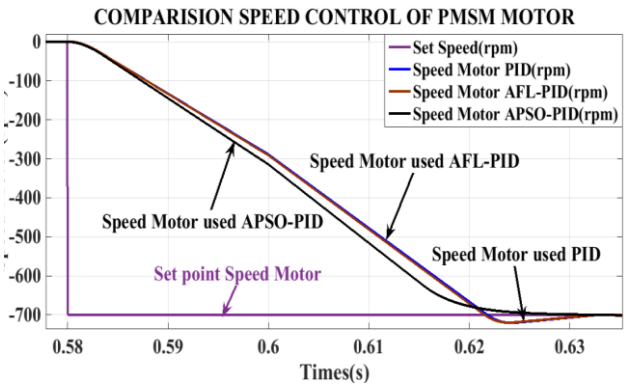

Figure 18. Compare speed control PMSM between PID and AFL-PID and APSO-PID controllers inscreate speed from 0 to -500)(rpm).

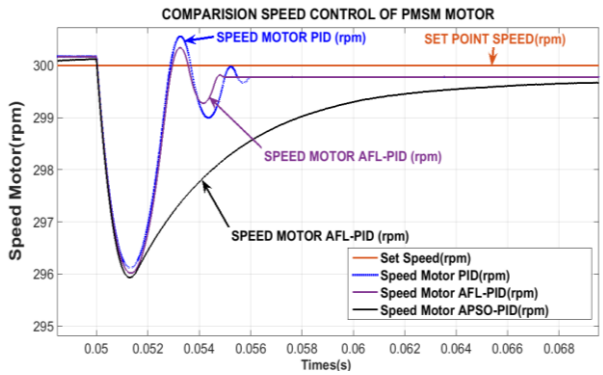

Figure 19. Comparision PMSM motor Change load use PID, AFL-PID and APSO-PID controllers.

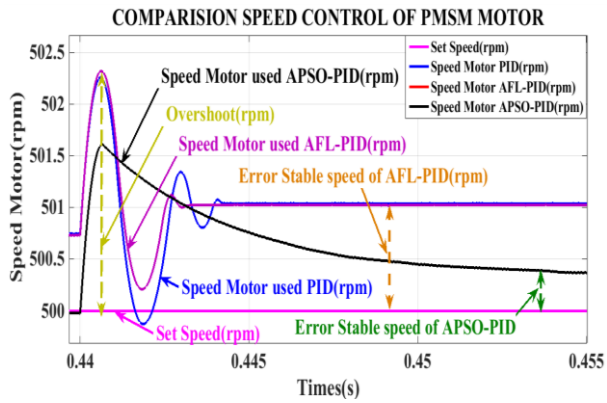

Figure 20. Comparision PMSM motor Dischange Load use PID, AFL-PID and APSO-PID controllers.

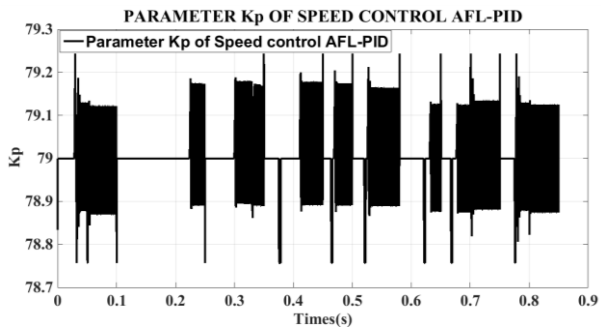

a)

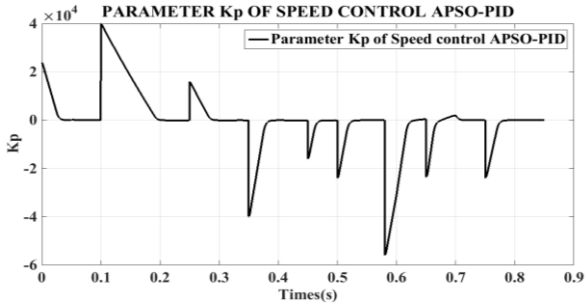

b)

Figure 21. Parameter K_p of Speed control: a) AFL_PID; b) APSO-PID

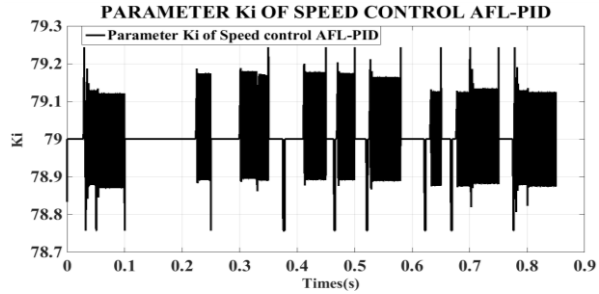

a)

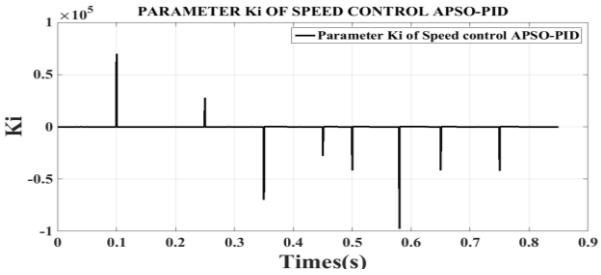

b)

Figure 22. Parameter K_i of Speed controllers: a) AFL-PID; b) APSO-PID.

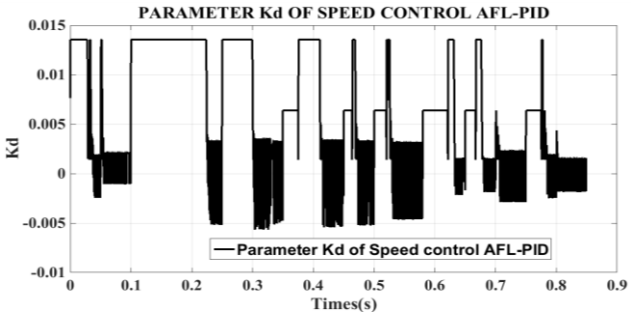

a)

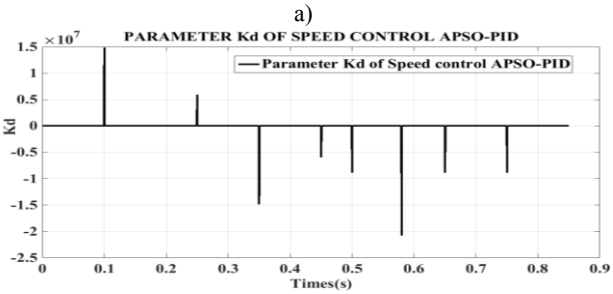

b)

Figure 23. Parameter K_d of Speed control : a) AFL-PID; b) APSO-PID.

The parameters K_p , K_i and K_d of AFL-PID and APSO-PID controllers in operation PMSM servo systems shown in the "*Fig.21*" to "*Fig.23*". They always change increate or descreate when the system have any change parameters know or unknow of PMSM servo systems driver. The K_p, K_i and K_d of two adaptive controlles show clearly the adaptive with operated systems drive.

Table 3. The quality of AFL-PID and APSO-PID speed controllers for PMSM servo Systems in the cases: start-up, charge load and discharge load.

	Start-up 0 - 200(rpm)		**Discharge load T_L from 30N.m to 15 N.m at t=0.44(s)**		**Charge load T_L from 0 N.m to 20N.m at t=0.05(s)**	
Controller	***AFL-PID***	***APSO-PID***	***AFL-PID***	***APSO-PID***	***AFL-PID***	***APSO-PID***
$\Delta\omega_{Max}$ *(rpm)*	5.0	0.0	2.25	1.5	3.7	4
Response times (s)	0.02	0,03	0.01	0.015	0.018	0.019
Steady-State (%)	0.2	0.1	0.2	0.1	0.001	0.001
Overshoot/ Undershoot (%)	2.5	0.0	0.5	0.3	1.23	1.33
Number of oscillation cycles	1	0	2	1	2	1

6 Simulation results

This paper, the AFL-PID and the APSO-PID algorithms are proposed based on the analysis of the relationships between optimal K_p, K_i and K_d of the PID parameters and response characteristics. The dynamic response information is fully utilized for the search in progress, including the monitoring of the stability for generating the new solution to replace the slow stable ones. The design new update rules of inertia weight with respect to the values; and integrating the new time-domain performance criterion. Through the simulation speed control of the PMSM motor systems driver.

The results show that the proposed controller can nearly perform an efficient search for the optimal PID controller parameters in comparison with PID controller and APSO-PID controller and AFL-PID controller. It is clear from the good results that the proposed methods can solve the searching and adaptive control with tuning problems of PID controller parameters more easily and quickly by the improved Fuzzy Logics and PSO methods. The best quality results were APSO-PID speed controller.

References

1. Inoue, T., et al., *"Mathematical model for MTPA control of permanent-magnet synchronous motor in stator flux linkage synchronous frame,"* IEEE Transactions on Industry Applications, 51(5): p. 3620-3628, (2015).
2. Kakosimos, P. and H. Abu-Rub, *"Predictive speed control with short prediction horizon for permanent magnet synchronous motor drives,"* IEEE Transactions on Power Electronics, 33(3): p. 2740-2750, (2018).
3. Rajinikanth, V. and K. Latha, *"Tuning and retuning of PID controller for unstable systems using evolutionary algorithm,"* ISRN Chemical Engineering, (2012).
4. Liu, J., et al. *"An improved adaptive fuzzy PID controller for PMSM and a novel stability analysis method,"* in Future Energy Electronics Conference and ECCE Asia (IFEEC 2017-ECCE Asia), 2017 IEEE 3rd International, IEEE,(2017).
5. Bouallègue, S., J. Haggège, and M. Benrejeb, *"A new method for tuning PID-type fuzzy controllers using particle swarm optimization,"* in Fuzzy Controllers-Recent Advances in Theory and Applications, InTech,(2012).
6. Tarmizi, W.F.W., et al. *"A Particle Swarm Optimization-PID controller of a DC Servomotor for Multi-Fingered Robot Hand,"* in Robotics and Manufacturing Automation (ROMA), 2016 2nd IEEE International Symposium on. IEEE, (2016).
7. Liu, J., H. Li, and Y. Deng, *"Torque ripple minimization of pmsm based on robust ilc via adaptive sliding mode control,"* IEEE Transactions on Power Electronics, 33(4): p. 3655-3671,(2018)
8. Tehsin, S., et al., *"Self-organizing hierarchical particle swarm optimization of correlation filters for object recognition,"* IEEE Access, 5: p. 24495-24502, (2017).
9. Chen, J., et al. *"Knowledge-based particle swarm optimization for PID controller tuning,"* in Evolutionary Computation (CEC), 2017 IEEE Congress on. IEEE, (2017).
10. Lu, Y., et al., *"Improved particle swarm optimization algorithm and its application in text feature selection,"* Applied Soft Computing, 35: p. 629-636, (2015).
11. Kumar, V., P. Gaur, and A. Mittal, *"ANN based self tuned PID like adaptive controller design for high performance PMSM position control,"* Expert Systems with Applications, 41(17): p. 7995-8002, (2014).
12. Qiang, S., et al. *"Adaptive-fuzzy PI control strategy for flux*-switching *permanent magnet motors,"* in Automation (YAC), 2017 32nd Youth Academic Annual Conference of Chinese Association of. IEEE, (2017).