Implementation of Maximum Power Point Tracking to Improving the Solar Cell Efficiency

Sepannur Bandri, Zulkarnaini Zulkarnaini, and Andi Sofian

Institut Teknologi Padang, Electrical Engineering Department, Padang, West Sumatra, Indonesia

Abstract. The sun is one of renewable energy sources. The use of sunlight using solar panels as a power plant began to be developed to reduce the use of fossil fuels. Solar panels have the advantage of being environmentally friendly because they do not have pollution-generating waste, are inexpensive and easy to apply. The power generated by solar panel is influenced by temperature and light intensity factor. The main problem of using solar panels is its efficiency is still low. This research presents an attempt to improve the energy conversion efficiency by solar panels by using Maximum Power Point Tracking method. The main principle of this method is adjusting the output voltage from the solar panel to obtain maximum power for different intensity of sunlight. The solar panel output voltage setting is performed using a buck boost converter controlled by MPPT system. The simulation results show that the use of this method of solar panel output power is higher by 64,78% - 87,06% than without MPPT.

1 Introduction

In the current energy crisis conditions, scientists are competing to find and examine the use of alternative energy sources to ensure the sustainability and availability of these energy sources. fossil energy as a major energy source is very limited and is subject to a threat of scarcity due to the use of such energy on a large and continuous scale. In addition, pollution rates resulting from fuel energy generation is very large. Therefore, there needs to be an alternative renewable energy source for the purpose of fossil energy sources. The solar energy is an environmentally friendly and clean energy source and is available to him in an infinite number of environments [4]. Solar power plants (photovoltaic arrays) are a new energy source and. Which is very promising to be developed in order to meet energy needs. This power plant utilizes sunlight as a source of energy to generate power that continues to use its use both in small scale and large scale [1].

This new modified alternative energy sources have been put forward by previous researchers like Tri et al. (2011) and Radhityo (2012), but to realize its large-scale utilization in our country Indonesia is experiencing delays, because it is related to development policy, as well as politics and understanding of society. In this study deliberately taken from the side that is relatively easy to realize, that is for use in the household scale. It is time to target only on the household scale but mention the big number of each household conscious to utilize this system, certainly not the least will provide convenience to the needs of power [1][3].

Photovoltaic has an optimum operating point called power point tracking (MPPT), where the optimum point varies According to irradiance and photovoltaic temperature. When the PV array is connected directly to the battery then the PV array disk to operate on battery, so that the PV array does not work at the point of maximum power (tracking the maximum power point). MPPT will calculate the address where the photovoltaic circuit will work optimally. With MPPT will make the photovoltaic array will work at its maximum voltage so as to produce maximum power. If a 24 Volt battery is installed in the output portion of the photovoltaic array using a boost converter and a 100% circuit efficiency using MPPT the charging current of the battery becomes 3.15A, the power extracted in accordance with the photovoltaic power rating of the array. Electricity emitted by the photovoltaic array is conditioned by the regulator's voltage using the technique of tracking the maximum power point for a proper charging of the battery. By extracting the power from the photovoltaic array, it is expected that the storage of electricity in the battery is maximum and lasts continuously [5]

2 Proposed Topology

Maximum Power Point Tracking (MPPT) is an electronic system that runs Photovoltaic (PV) modules in order to optimize the power available on the solar array. MPPT is not a mechanical system that can drive solar arrays to the point where the sun is most powerful. MPPT is an electronic system that alters the parameters generated by solar arrays so that solar arrays can transfer power to the

* Corresponding author: sepannur@itp.ac.id

© The Authors, published by EDP Sciences. This is an open access article distributed under the terms of the Creative Commons Attribution License 4.0 (http://creativecommons.org/licenses/by/4.0/).

maximum. MPPT can be used with a multilevel mechanical system and direct the solar array to the most powerful sunlight, but it needs a very different system [5].

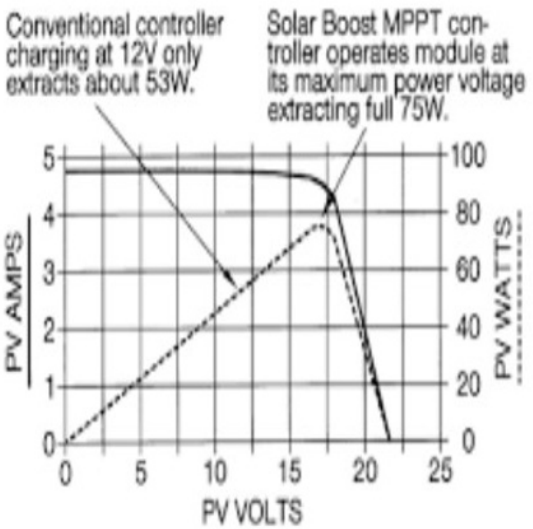

Fig. 1 MPPT characteristic

The conventional solar array controllers are forced to operate with battery voltage, so the solar array does not work at the maximum power point tracking. For example, see figure 1. If we force the solar array to work on a 12 V battery voltage when the power produced by the solar array is 75W, then the extractable power is only about 53 W only. Compared with determining the operating voltage directly, MPPT calculates the voltage at which the PV array can work maximally. For example, the maximum voltage on the PV array is 17 V, MPPT system will make the solar array work at its maximum voltage so that maximum power will be obtained. For example, in the solar array output section we install a 24 V battery then when used boost converter and 100% circuit efficiency, using MPPT current that charge the battery will be. So the power that is successfully extracted into 24 x 3.15 = 75 W. In practice this efficiency will be slightly lower, this is due to the loss of power caused by the MPPT circuit [6].

The model of circuit for MPPT is shown below: The two most important things in designing MPP tracker are the topology of the switch mode and the control mechanism. There are several switch mode topologies that can be used: boost, buck, buck-boost. In this study used the converter boost topology, with consideration boost converter can easily track MPPT because the output voltage on the boost converter is greater than the input voltage [4].

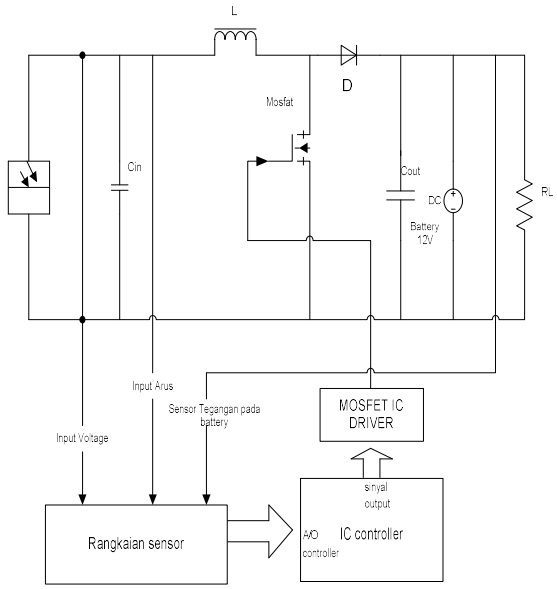

Fig. 2 Control mechanism of MPPT

The control mechanisms applied in this study are shown in Figure 2. MPPT power is detected by using signals from voltage and current input. Analog signals are converted by A/D converters into digital signals and processed inside the controller [5] [7]. The PWM output on the controller gives the MOSFET driver the input to drive the MOSFET according to the specified duty cycle, when the full battery feedback sensor gives the signal so that the controller will stop charging the battery [1].

3 Design of MPPT Circuit

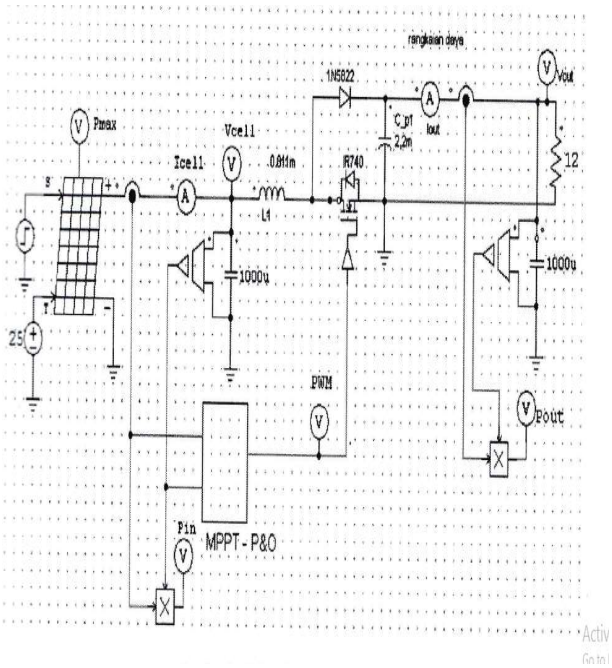

Fig. 3 Design of circuit

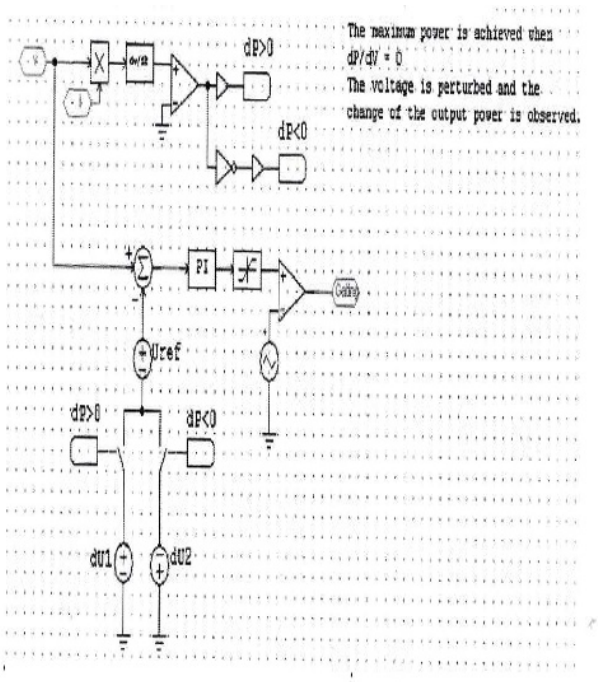

Fig. 4 MPPT circuit design

3.1 MPPT algorithm

MPPT algorithm used in programming Digital signal processing is the Perturbation and Observation (P & O) algorithm chosen because of its simplicity, both theoretically and in its writing. To write the MPPT algorithm on DSP microcontroller used C language which then compiled using Code Composer Studio (CCS). The P & O algorithm used is as follows:

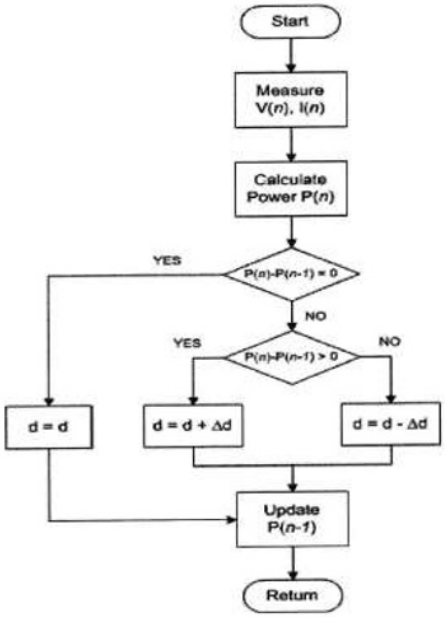

Fig. 5. MPPT Algorithm

There are two observable conditions of the above algorithm which can be described in the P-V curve of the solar panel as follows:

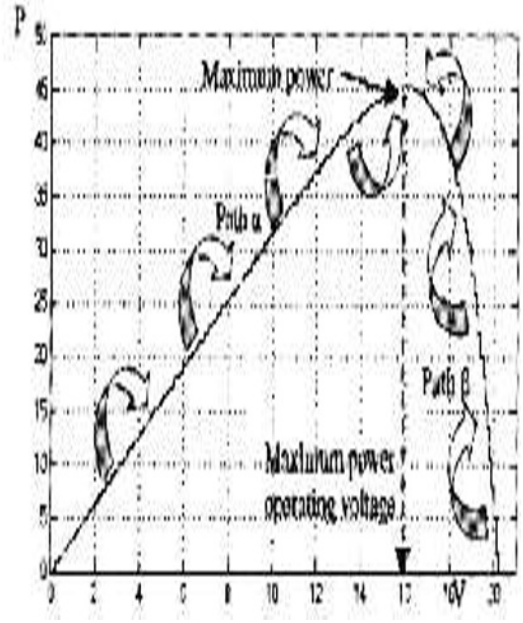

Fig. 6 P-V curve of solar panel

The first condition is when Pn> Pn-1. This condition can be described as α path in figure 6 above. From this situation it can be seen that the PV power will increase with increasing PV operating voltage. Therefore, small voltage perturb are done by increasing the duty cycle, it is necessary to reach the MPPT point. 2. The first condition is when Pn> Pn-1. This condition can be described as α path in figure 6 above. From this situation it can be seen that the PV power will increase with increasing PV operating voltage. 3. The first condition is when Pn> Pn-1. This condition can be described as α path in figure 6 above. From this situation it can be seen that the PV power will increase with increasing PV operating voltage. Therefore, small voltage peculators (V) are done by increasing the duty cycle, necessary to reach the point of MPPT.

3 Simulation Results

The power generated by solar panels is dependent on the exposure of the irradiance, the decrease of power is precisely at the time of decreased irradiation. at the time of the simulation of the dome irradiation from 1000 w / m2 to 900 w / m2 at t = 0 seconds, resulting in a decrease in the maximum output power of the solar cell. for voltage and current graph can be seen in the following curve.

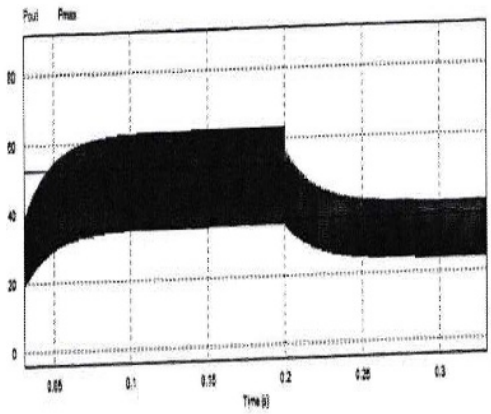

Fig. 7. Curve of power output

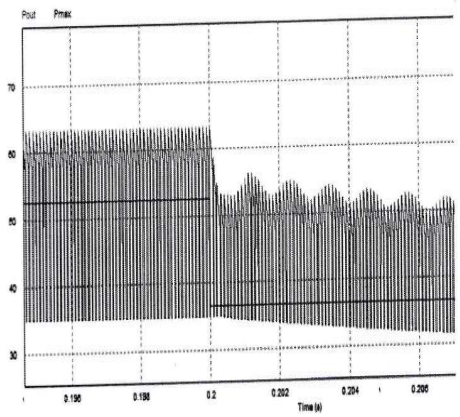

Fig. 8. perturbation of power output

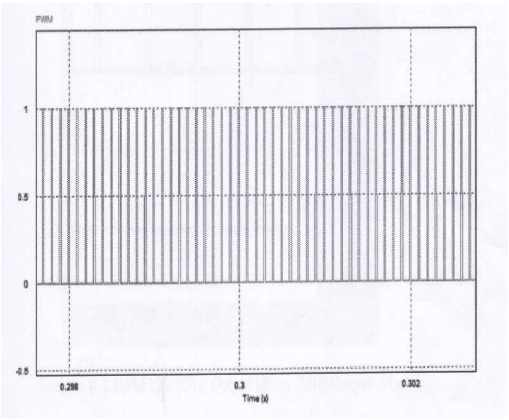

Fig. 9. PWM signal of controller

on the curve above, the input voltage is shown in red, the output voltage is blue, the MPPT input current is green and the MPPT output current is pink. in the voltage chart it is seen that the boost converter serves to increase the voltage, where the MPPT output voltage is greater than the input voltage. while on the current curve, the output current from MPPT undergoes oscillation, this indicates the perturbation process runs as it reaches the point of MPPT. MPPT output power cycles around maximum power, so the power generated using MPPT is approximately the maximum power value that solar panels can generate at each irradiance level. this indicates that the MPPT design has worked well. the implementation of the MPPT design can be seen in the picture below.

3 Conclusion

Topology boost converter design has been increased of efficiency of power 85% and the average increase of power 32.7% with the ideal PWM switching frequency to control Boost converter is 50 KHz. The working frequency limit of the duty cycle of boost converter is 10%-60%. The selection of working frequency is influenced by the efficiency of the converter

Acknowledgement

We would like to thank very much to the team of the laboratory of electrical engineering of the Institut Teknologi Padang whose helped us in research in the laboratory. We would also like to thank for Ministry of Research, Technology and Higher Education' Republic of Indonesia whose helped fund this research in accordance with the research contract number **325 / 27.O10.5 / PN /II/ 2018**

References

1. Tohid Nouri,et.all., *Generalized Transformerless Ultra Step-Up DC-DC Converter with Reduced Voltage Stress on Semiconductor*, IET Power Electronics, **vol.7**, issue 11, pp.2791-2805, (2014)
2. Po-Wa Lee,et.all., *Steady-State Analysis of An Interleaved Boost Converter with Coupled Inductor*, IEEE Transaction On Industrial Electronics, **vol 47**.No.4, pp 787-795, (2000)
3. Wang, P. et al., *Input-parallel Output-series DC-DC Boost Converter with a Wide Input Voltage Range*, for Fuel Cell Vehicles. , 9545(c), (2017)
4. Vazquez, A. et al., *Different Modular Techniques Applied in a Synchronous Boost Converter with SiC MOSFETs to Obtain High Efficiency at Light Load and Low Current Ripple*. IEEE Transactions on Industrial Electronics, 0046(c), pp.1–1, (2017)
5. Cadirci, I. et al., *Unity power factor boost converter with phase shifted parallel IGBT operation for medium power applications*. Electric Power Applications, IEEE Proceedings ,149(x), pp.237–244, 2002.
6. Corcau, J.I. et al., *Multisim implementation and analysis of a DC to DC boost converter with two parallel stages*. International Conference on Electrical Drives and Power Electronics, Proceedings, pp.88–93, (2015)
7. Sen, G. et al, *Comparison of current balancing configurations for Primary Parallel Isolated Boost Converter. International Aegean Conference on Electrical Machines and Power Electronics*, ACEMP 2011 and Electromotion 2011 Joint Conference, (September), pp.449–454, (2013)A. Mecke, I. Lee, J.R. Baker jr., M.M. Banaszak Holl, B.G. Orr, Eur. Phys. J. E **14**, 7 (2004)