MATEC Web of Conferences **94**, 02009 (2017) DOI: 10.1051/matecconf/20179402009
CoSME'16

Experimental research about positioning correction of CNC machine with X-axis up to 12000 millimeters using laser measurement equipment

Ştefan Adrian Moldovan[1,*], *Marius* Cosma[1], and *Vasile* Năsui[1]

[1]Technical University of Cluj-Napoca - North University Center of Baia Mare, Romania

Abstract. In this paper we present a research regarding adjustment machining accuracy on CNC machines with long axis for increasing positioning accuracy considering as a factor: thermal expansion effect. The research performed was made using laser equipment on industrial CNC machines used for production of aerospace components made of aluminium alloy extruded profile with length up to 12000 mm. Those parts have very tight tolerances and on milling process appear several factors that influence the repeatability of machining processes, the main one being the thermal expansion effect. The research results prove the improvement of positioning precision using the coefficients obtained from experimental measurements.

1 Introduction

The application methodology for this research is to check, to correct and to control the machining process, in a factory which makes parts for aerospace industry. In aerospace industry the major importance is to have a good process control for quality of the assemblies parts, to create a process repeatability, because this involves the humans, passengers safety [1].

Without a stable process control for serial production, the machining production will have a bottleneck. To have a quality assurance it will be necessary for each machined part to inspect everything, 100%, to confirm the part quality. This will involve more time and extra costs.

Using laser measurement control equipment, the positioning accuracy caused by backlash error and thermal dilatation error of CNC machines, could be checked and correct easily.

On this research the main contributions are: measurements and collecting CNC machine positioning deviation values from X-axis based on backlash and temperature influence, create a solution to solve this problem, adjust the CNC machine parameters for X-axis with the backlash correction coefficient and thermal dilatation coefficient; achievement the experimental tests [2].

* Corresponding author: moldovan.stefanadrian@gmail.com

2 The main elements that are part of the machining process

2.1 CNC machine definition

The machining process is performed in a normal processing unit, without climate control and the CNC machine used is Handtmann PBZ NT (Figure 1).

The PBZ NT is a profile machining center features impressive maximum flexibility and great cost electiveness in machining aluminum and steel. A flexible clamping system for machining different profile cross sections and up to 90 tool slots allows for a wide range of applications up to 25 meters in length. An integrated sawing unit for spatial cuts completes the highly efficient PBZ NT machine concept [3].

A few technical data for PZB NT [4]:

- 5-axis concept,
- Fixed portal,
- Part lengths up to 25 meters,
- Workpiece cross section max. 750 x 300 mm,
- Max. spindle power 37 kW, max. spindle speed 28.000 rpm,
- Control: SIEMENS Sinumerik 840D,
- CNC-controlled clamping system, variable number of clamping jaws,
- Coolant: mist.

Fig. 1. Handtmann PBZ NT [2].

2.2 Extrusion and part complexity

The research was conducted on extruded aluminium alloys work pieces used in aerospace industry (Figure 2), with a wide range of alloys and treatments. With thin walls and the section represents a high resistance to shock and breakage, develop from advanced alloys tailored for specific applications to help find the right balance of strength, damage tolerance, and corrosion resistance.

Fig. 2. Examples of aerospace parts used in researches [2].

With thin walls and the section represents a high resistance to shock and breakage [5], develop from advanced alloys tailored for specific applications to help find the right balance of strength, damage tolerance, and corrosion resistance.

Manufacturing process of those parts are define through: drilling holes with different diameters used for subassembly montage, milling different geometries, contour and additional pockets to reduce the final part weight. Most of the geometry and holes have tolerance ± 0.2 mm on 12000 mm length (Figure 3).

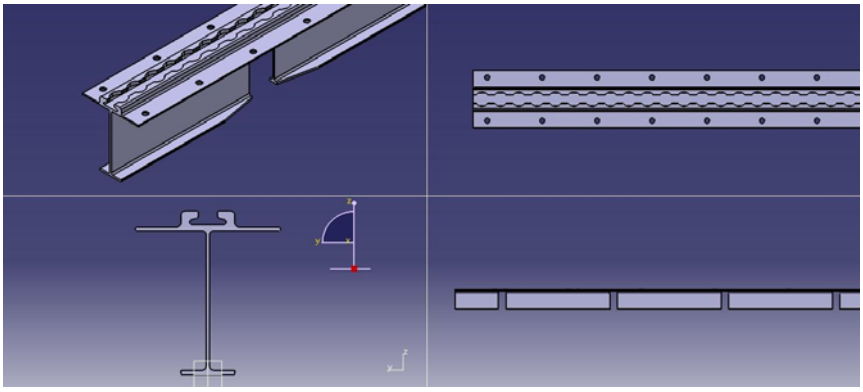

Fig. 3. Multi view of the part in 3D CAD – CATIA R21 [2].

2.3 Problem detection

All machined parts specific for aerospace industry needs to be validated by CMM (coordinate measuring machine), placed in a room with temperature control environment.
CMM is a device for measuring the physical geometrical characteristics of an object. The typical 3 "bridge" CMM (Figure 4) is composed of three axes, an X, Y and Z [6].

Fig. 4. Metris CMM, 3 "bridge" used for parts control [2].

These axes are orthogonal to each other in a typical three-dimensional coordinate system. Each axis has a scale system that indicates the location of that axis. The machine will read the input from the touch probe, as directed by the operator or programmer. The machine then uses the X, Y, Z coordinates of each of these points to determine size and position with micrometer precision typically.

Metris is an high quality and innovative metrology solutions to a wide range of industries.

Metris CMMs are supplied with CAMIO Studio and the MCC-200 controller as standard and benefit from the same broad range of hardware options including [5]:
• point to point scanning - for a Renishaw TP200 touch trigger probe,
• continuous contact scanning - Renishaw SP25 analogue probe,
• non-contact laser scanning – Metris LC and XC range of laser scanners,
• fully automated stylus and probe changers,
• motorized indexing or rotary table,
• pneumatic anti-vibration mounts,
• temperature compensation.

2.4 Methods for solving the problem

2.4.1 Laser measurement system

The Renishaw laser measurement system is an ideal solution for the complete calibration of machines (Figure 5), enabling the measurement of a wide range of geometric and dynamic characteristics.
Measurement options [7]:
• linear positioning accuracy and repeatability of an axis,
• angular pitch and jaw of an axis,
• straightness of an axis,
• squareness between axes,
• flatness of a surface,
• rotary axis/table angular positioning,

• dynamic characteristics of a machine.

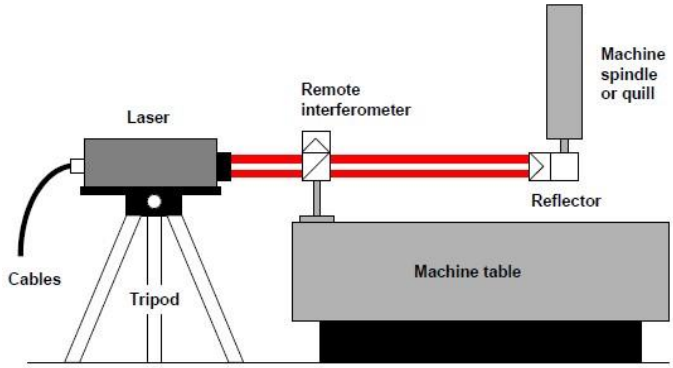

Fig. 5. Laser measurement system [7].

2.4.2 Linear measurement

The system measures linear positioning accuracy and repeatability by comparing the position displayed on a machine's readout with the true position measured by the laser. There values can then be viewed, printed and statistically analysed by the system's Renishaw plc XCal-View 2.0.0.17005 software to national and international standards. This software generate a coefficient for deviations compensation of positioning repeatability named backlash and corrects positioning for intervals from 100 to 100 mm with deviations measured from laser system (Figure 6).

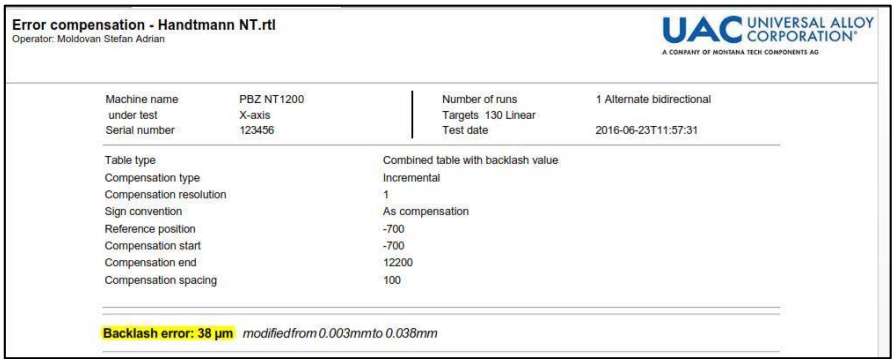

Error compensation - Handtmann NT.rtl
Operator: Moldovan Stefan Adrian

UAC UNIVERSAL ALLOY CORPORATION
A COMPANY OF MONTANA TECH COMPONENTS AG

Machine name	PBZ NT1200	Number of runs	1 Alternate bidirectional
under test	X-axis	Targets 130 Linear	
Serial number	123456	Test date	2016-06-23T11:57:31

Table type	Combined table with backlash value
Compensation type	Incremental
Compensation resolution	1
Sign convention	As compensation
Reference position	-700
Compensation start	-700
Compensation end	12200
Compensation spacing	100

Backlash error: 38 µm *modified from 0.003mm to 0.038mm*

Fig. 6. Renishaw plc XCal-View 2.0.0.17005 software [2].

For easy optical alignment the components used in this measurement comprise are linear beam-splitter and retro-reflectors (Figure 7).

Fig. 7. Linear beam-splitter and retro-reflectors [7].

In linear measurement, one retro-reflector is secured to the beam-splitter, to form the fixed length reference arm of the interferometer. The other retro-reflector moves relative to the beam-splitter and forms the variable length measurement arm. The laser system tracks any change in the separation between the measurement arm retro-reflector and beam-splitter (Figure 8).

Fig. 8. Positioning the retro-reflectors on the frame of Handtmann PBZ NT [2].

3 Results

The correction of position accuracy is developed from three steps:

- Laser measurement of X-axis positions on initial state of Handtmann CNC machine from 100 to 100 mm, the trend represented in Figure 9 with yellow colour.
- Laser measurement of X- axis positions without any coefficients, some results recorded in Table1, the trend is shown in Figure 9 with black colour. The new backlash is generated, in our case the backlash value is 0,038 mm. Measured values of deviations will be used on positioning adjustments. After this correction the measurement trend is almost straight and the machine precision is increased.
- Laser measurement of X-axis positions using the new backlash and the new correction of positioning values from 100 to 100 mm the trend represented in Figure 9 with blue colour.

Table 1. Some laser measured values of X-axis position deviations.

Index	Positions (mm)	Deviation (µm)	Index	Positions (mm)	Deviation (µm)
1	-700	0	18	1000	22
2	-600	21	28	2000	-4
3	-500	-10	38	3000	4
4	-400	9	48	4000	-3
5	-300	14	58	5000	3
6	-200	-21	68	6000	-4
7	-100	3	78	7000	-20
8	0	7	88	8000	-3
9	100	-11	98	9000	2
10	200	19	108	10000	-5
11	300	5	118	11000	-8
12	400	-23	127	11900	-25
13	500	8	128	12000	13
14	600	2	129	12100	22
15	700	11	130	12200	-2

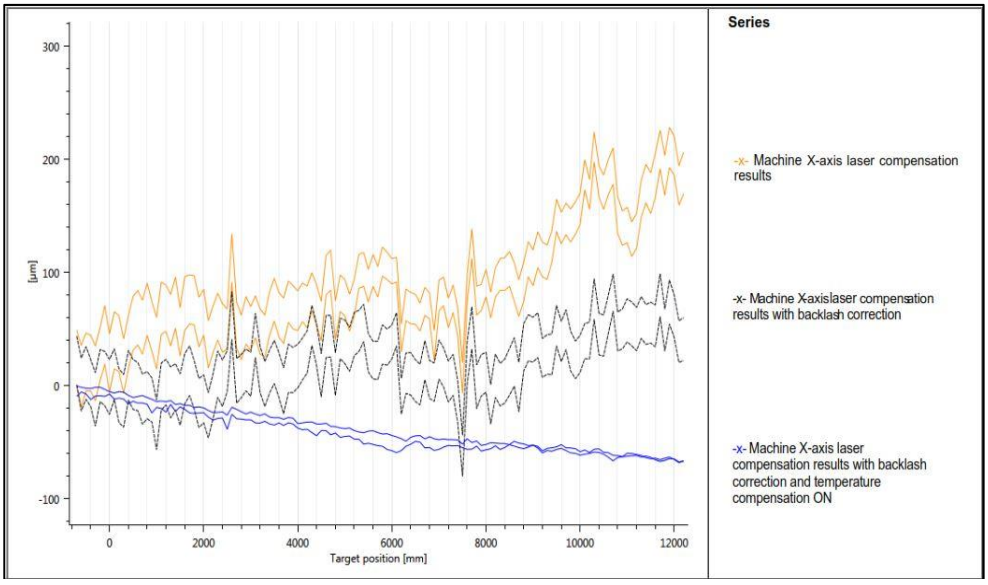

Fig. 9. The chart of measured values from Renishaw software [2].

Besides generate coefficients from Renishaw software, to can increase the positioning accuracy is necessary to take into consideration the difference between coefficients from thermal dilatation of machine frame and raw material [8]. For machining aluminium alloys the difference is $12 \cdot 10^{-6}$ /ºC (Figure 10) coming from difference between frame dilatation coefficient $11 \cdot 10^{-6}$ /ºC and aluminium alloy dilatation coefficient $23 \cdot 10^{-6}$ /ºC).

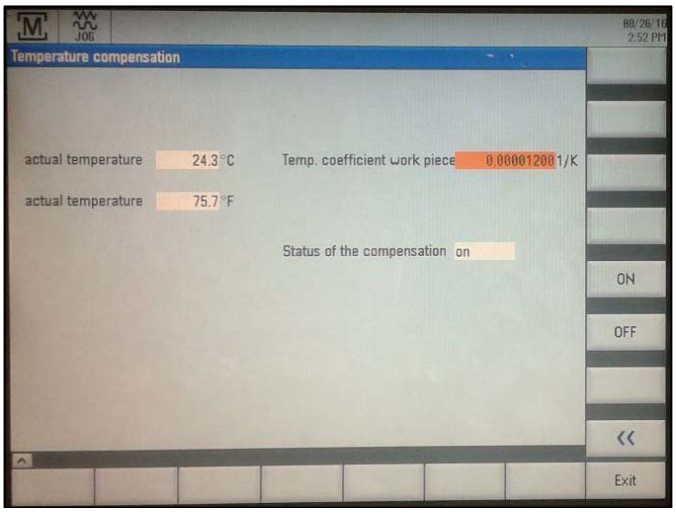

Fig. 10. Handtmann NT thermal dilatation coefficient [2].

4 Conclusions

Experimental research bring a version of thermal expansion which influence the stability of the cutting process on processing centres, which is a major concern for processing repeatability of specific parts from aerospace industry.

This research methodology improve the machining process control with are influenced by temperature. The original contribution for this research is: monitoring the X-axis positioning fluctuation and implementing through machine variables a backlash correction.

The experimental research conducted with the support of the machining department of SC Universal Alloy Corporation Europe SRL, Dumbrăviţa.

References

1. V. Năsui, *Bazele cercetării experimentale* (Editura Universităţii de Nord, Baia Mare, 2000)
2. Cercetări privind creşterea eficienţei la operaţiile de prelucrare pe maşini-unelte cu comandă numerică în cadrul S.C. Universal Alloy Corporation Europe S.R.L. (Nr.3657/09.02.2016)
3. Training Guide PBZ NT Ver. (2010)
4. https://www.handtmann.de/en/machining-centres/products/pbz-profile-machining-centres/pbz-nt/ (2016)
5. http://www.universalalloy.com/Manufacturing-Capabilities.html (2016)
6. Metris Bridge CMM User Guide (2016)
7. http://www.arc-bg.com/prod_file/81.pdf (2016)
8. Function Manual, SINUMERIK 840D sl / 828D Extended Functions (2016)